ROSEVILLE
Community Development Department
651-792-7074 ◆ fax: 651-792-7070

June 11, 2012

Mr. Mark Abramovitz
Flame Development Company
1660 South Highway 100
Suite 532
St. Louis Park, MN 55416

Mr. Perry Bolin
5009 Quail Avenue North
Minneapolis, MN 55426

Re: 1723 County Road B2 - Master Sign Plan Approval

On May 10, 2012, the Roseville Master Sign Plan Committee held the administrative hearing to review and consider the Master Sign Plan 1723 County Road B2. No adjacent property owners or citizens were present to address the committee and the City Planner did not receive any calls, email, or letters concerning the proposal.

The MSP Committee has reviewed the proposal and approves the following as the MSP for 1723 County Road B2:

WALL SIGN REQUIREMENTS

- Advertising, flashing, pulsating, rotating light (or lights), rooftop, banners, mobile signs, and portable signs shall be prohibited, as well as other prohibited signs covered under Section 1010 of the Roseville City Code.
- Wall signs shall be limited to total of 392 square feet calculated as follows – 2 sq. ft. of signage for each lineal foot of building front times 196 lineal feet equals 392 total square feet of allowable building wall signage.
- Wall signs meeting the total square footage allowed, can be installed on all four sides of the building.
- Wall signs (including identity logos and/or symbols) shall be individual or channel letters that may be illuminated, have finished returns and/or be installed on raceways, and shall not exceed 36 inches in height.
- Letter returns and raceways may be painted, prefinished, or utilize exposed metal; and exposed metal shall be stainless steel, titanium, bronze, aluminum, or other non-corrosive material.
- Sign panels/cabinets may be used in place of individual or channel letters.

- Sign panels/cabinets may be used in place of individual or channel letters.
- Sign material shall be limited to metal and acrylic with UV inhibitors. All materials shall be made of high quality durable materials and finishes, and be of the highest quality fabrication.
- Window graphics/signs shall be limited to 25% of the window area.

FREESTANDING SIGN REQUIREMENTS

- The site shall be allowed to refurbish the existing freestanding sign along County Road B2. The sign shall be limited to three sign panels totaling 120 sq. ft. and of the following dimensions - 5 feet by 15 feet or 75 sq. ft., 2-1/2 feet by 12 feet or 30 sq. ft., and 2 feet by 7-1/2 feet or 15 sq. ft. or a total of 120 sq. ft. for the sign. A 3 foot by 7-1/2 foot or 22.5 sq. ft. temporary leasing sign shall also be installed on the sign (see attached illustration)
- The existing freestanding sign shall also include an update metal panel which encases the pole.
- Should the property owner desire to replace the existing freestanding sign, the following requirements shall apply: the sign shall be allowed to be constructed 7 to 10 feet away from the easement/property line, be a maximum of 25 feet in height, and be of a monument style complete with a base of brick, block and/or stone. Signage shall be limited to 120 square feet equally distributed among the three tenants. Final plans for this sign to be reviewed and approved by the Planning Division
- Should the property owner desire a second freestanding sign adjacent to American Street, the following requirements shall apply: the sign shall have a minimum setback of 5 feet from the property line, be limited to a height of 8 feet, and including no greater than 60 sq. ft. of signage – three equal sized tenant spaces of 20 sq. ft. Final plans shall be reviewed and approved by the Planning Division.
- Leasing information shall be incorporated into one or both freestanding signs (such as contact name and number), which shall not count against the sign total. On option is a wall sign not exceeding 24 sq. ft. being placed on the building. No freestanding leasing sign are permitted on the premises.

OTHER REQUIREMENTS

- Landlord//owner sign-off of any sign proposal shall accompany any sign permit and shall meet the requirements of the MSP.
- A sign permit is required for the installation of all signs on the premises.

Community Development Department
651-792-7074 ◆ fax: 651-792-7070

Should you have any questions or comments, please call me at 651-792-7074.

Respectfully,

CITY of ROSEVILLE

Thomas Paschke
City Planner

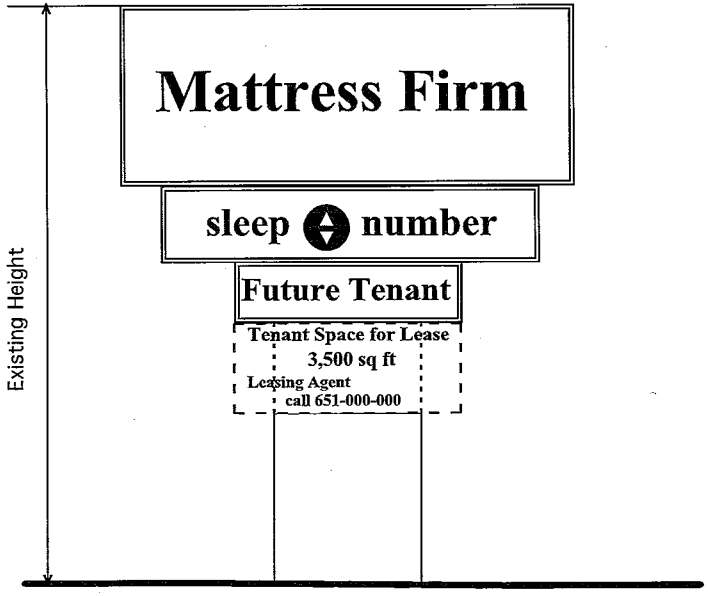

Double faced signs

Existing Mattress Firm Sign 5'-0" x 15'-0"		75 Sq Ft
Sleep Number Sign with logo 2'-6" x 12'-0"		30 Sq Ft
Future Tenant Sign 2'-0" x 7'-6"		15 Sq Ft
	Total	120 Sq Ft
Temporary leasing sign 3'-0" high and 7'-6" wide		22.5 Sq Ft

Pylon and Temporary Leasing Signs 6/5/12

Flame Development
1723 County Road B, Roseville MN 5513
Prime General Contractors
1001 East Cliff Road, Ste 302., Burnsville, MN 55337 952-746-3637

 Perry R. Bolin, Architect, NCARB, LEED AP
5009 Quail Ave. N., Minneapolis, MN 55429 perryb@usfamily.net 651-208-1798

1d

ROSEVILLE

COMMUNITY DEVELOPMENT

2660 Civic Center Drive ❖ Roseville, MN 55113
Phone: (651) 792-7005 ❖ Fax: (651) 792-7070

MASTER SIGN PLAN APPLICATION

CITY CODE SECTION 1010.03
www.ci.roseville.mn.us

☐ **RESIDENTIAL APPLICATION FEE: $250**

☒ **COMMERCIAL APPLICATION FEE: $350**

Fee should be made payable to City of Roseville upon submittal of application.

Please complete the application by typing or printing in ink. Use additional paper if necessary.

1. **Property Owner Information:** Flame Development Company, LLP
   Last name: Abramovitz *First name:* Mark
   Address: 1660 South Highway 100, Ste. 532 *City/State/Zip:* St. Louis Park, MN 55416
   Phone number: (952) 893-0729 *Email address:* brimar1036@yahoo.com
2. **Applicant Information:** *(if different from above)*
   Company name: Perry Bolin Architecture, PLLC
   Last name: Bolin *First name:* Perry
   Address: 5009 Quail Avenue North *City/State/Zip:* Minneapolis, MN 55429
   Phone number: (651) 208-1798 *Email address:* perryb@usfamily.net
3. **Address of Property Involved:** *(if different from above)*
   1723 County Road B2 West, Roseville, MN 55113
4. **Additional Required Information:**
   a. **Site plan** illustrating on-site improvements and location of proposed signage
   b. **Sign details** including sign dimensions, area calculations, and construction specifications for each sign being contemplated, as well as elevations showing wall signs and/or freestanding signs as appropriate
5. **Signature(s):** By signing below, you attest that the information above and attached is true and correct to the best of your knowledge.

Property Owner: Mark S Abramovitz *Date:* 04/04/2012

Applicant: Perry R Bolin *Date:* 04/04/2012

Perry Bolin Architecture, PLLC

Perry R. Bolin, AIA, NCARB, LEED AP
www.perrybolinarchitecture.com

5009 Quail Ave. N.
Minneapolis, MN 55429

(651) 208-1798
perryb@usfamily.net

PROGRAMS

Roseville. A Way of Life.

Living Smarter

Connect for a Lifetime of Healthy Living. Here in Roseville.

Welcome to the "Living Smarter" campaign—where we believe Roseville is not just a place to live, it is community that boasts a 'sustainable lifestyle.' And no matter where you're on the journey toward a sustainable, more environment-friendly life, we're here to help you along the way.

The "Living Smarter" campaign has been developed by the Roseville Housing & Redevelopment Authority (RHRA) to provide current residents, as well as those looking to move into the community, with resources that not only help protect our environment, but also to save money in the process.

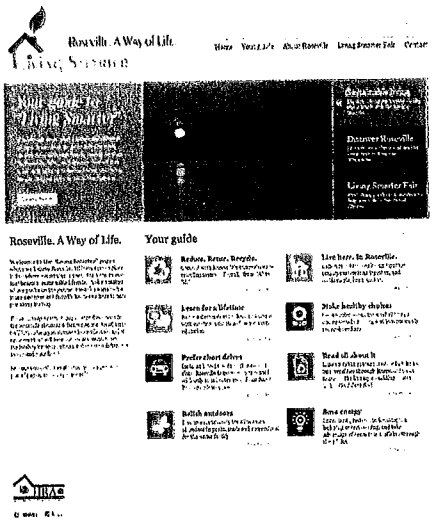

The all-new, easy-to-use www.LivingSmarter.org features resources that help you save money, connect with the healthy lifestyle options, and create a difference to you and your family. Feel free to set this as your browser's home page, or bookmark "Living Smarter," and check back frequently for the latest tips and features.

Your Guide features:

- » Reduce. Reuse. Recycle.
- » Learn for a lifetime
- » Prefer short drives
- » Relish outdoors
- » Live here. In Roseville.
- » Make healthy choices
- » Read all about it
- » Save energy

Making smarter choices about transportation doesn't necessarily mean buying a new, more fuel efficient car-it simply means learning how to drive less. Making home energy efficient doesn't necessarily mean costly renovations-it means incorporating best practices in landscaping, building or remodeling, and taking advtanage of programs and resources available to you and your family through the community. Living healthy needn't mean expensive specialty foods-it means being smarter about the kind of things you're already buying and looking for locally sourced produce. These changes may seem big and small, but 'Living Smarter' begins wherever you're right now.

So pour yourself a cup of coffee, grab a pen and a pad of paper and let's get started!

Access the "Living Smarter" resources at www.LivingSmarter.org

Contact
651.792.7015
hra@ci.roseville.mn.us

Location
Roseville Housing
and Redevelopment Authority
2660 Civic Center Drive
Roseville, MN 55113
www.cityofroseville.com/hra

HRA
Roseville Housing and Redevelopment Authority

For more information about the Living Smarter campaign, please visit www.LivingSmarter.org or contact 651.792.7015, or email info@livingsmarter.org.

City of Roseville
651-792-7000

04/09/2012 11:31
Receipt No. 00278702

signplan
Master Sign Pl
an 350.00

Receipt Total 350.00

Cash 0.00
Check 350.00 Check #3227
Charge 0.00

FLAME DEVELPMENT

,

Cashier: jill.hughes
Station: RVFIN701

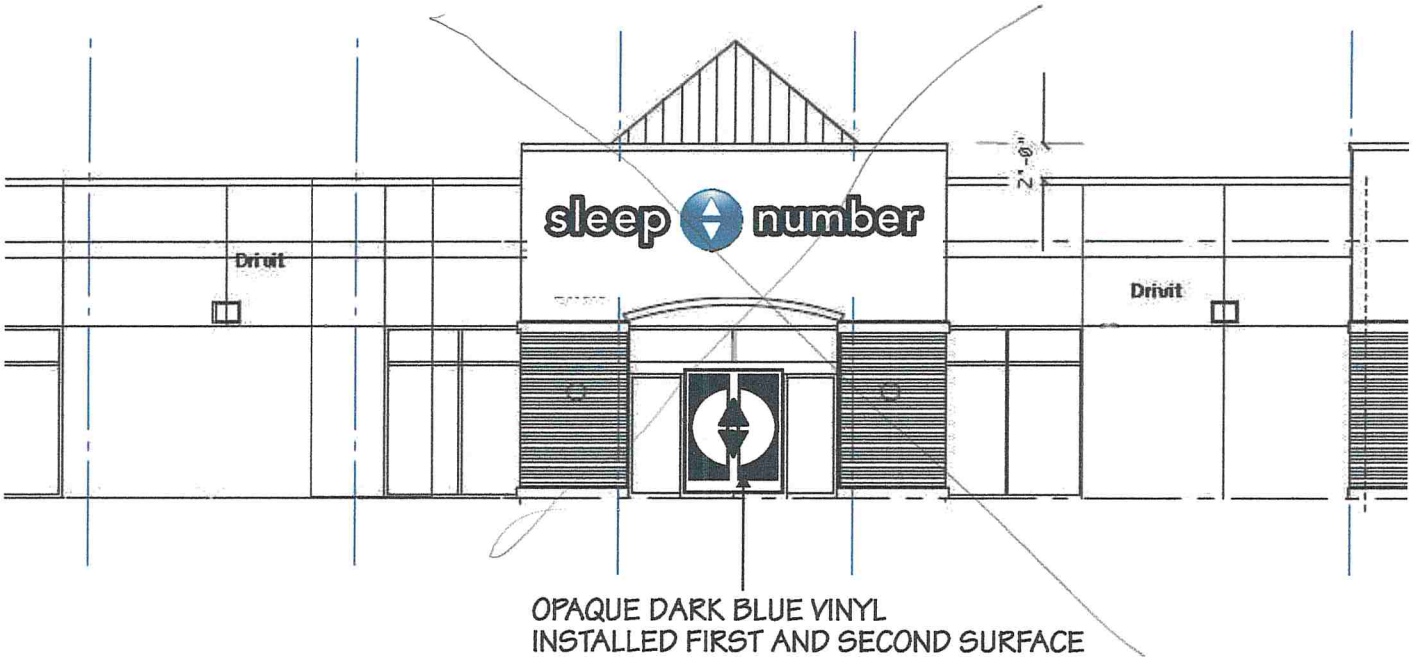

THESE SIGNS ARE 1.5 SQUARE FEET PER LINEAR FOOT. THIS HAS A MORE LIKELY CHANCE OF BEING APPROVED THAN PAGE 1 BUT WE WILL NOT KNOW FOR SURE UNTIL THE CITY REVIEWS THE LANDLORDS MASTER SIGN PLAN.

SEE PAGE 10
FOR SPECS

UNIVERSAL Signs INC.
1033 THOMAS AVE
ST. PAUL, MN 55104
ph 651-645-0223
fax 651-645-2531
www.universalsignsinc.com

LOCATION
SLEEP NUMBER
1723 COUNTY RD B2
ROSEVILLE, MN

DRAWN BY	REVISED
SEP	
DATE	SCALE
2/22/12	3/32" = 1'-0"

sleep number

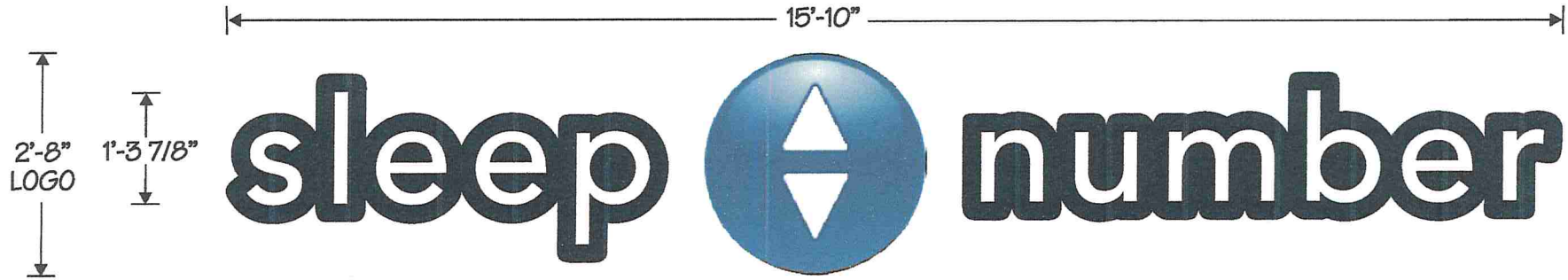

STORE FRONT SIGN 42 SQUARE FEET
1/2" = 1'-0"

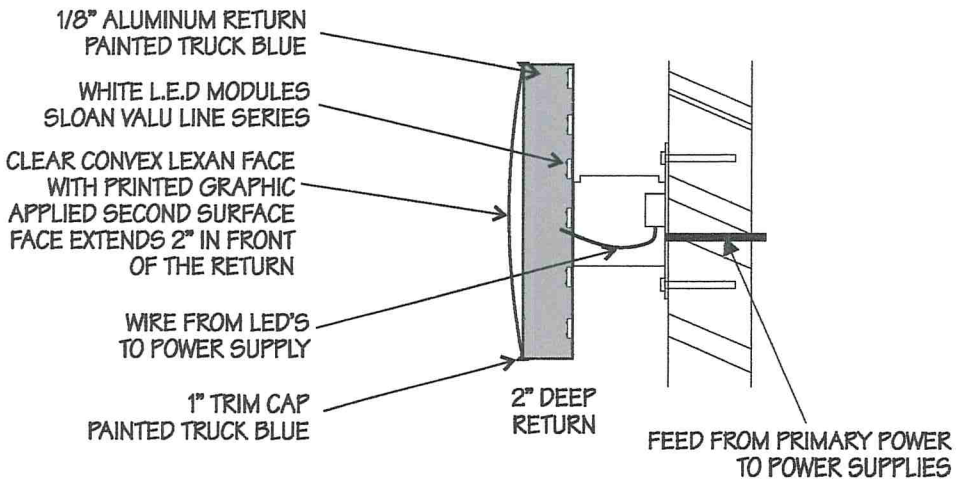

SECTION THROUGH LOGO
NO SCALE

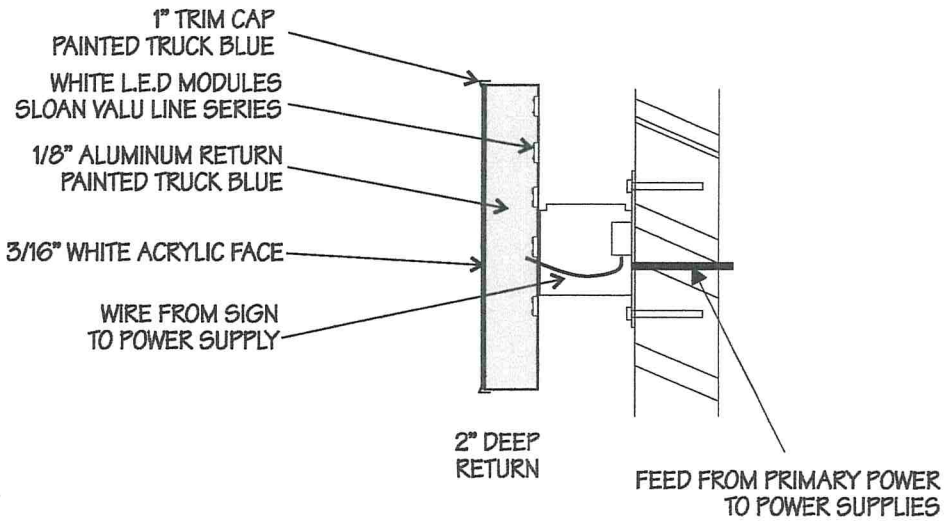

SECTION THROUGH LETTER
NO SCALE

UNIVERSAL Signs INC.
1033 THOMAS AVE
ST. PAUL, MN 55104
ph 651-645-0223
fax 651-645-2531
www.universalsignsinc.com

LOCATION
SLEEP NUMBER
1723 COUNTY RD B2
ROSEVILLE, MN

DRAWN BY	REVISED
SEP	
DATE	SCALE
2/22/12	NOTED

sleep number

UNIVERSAL Signs INC.
1033 THOMAS AVE
ST. PAUL, MN 55104
ph 651-645-0223
fax 651-645-2531
www.universalsignsinc.com

LOCATION
SLEEP NUMBER
1723 COUNTY RD B2
ROSEVILLE, MN

PAGE 7

DRAWN BY	REVISED
SEP	
DATE	SCALE
2/22/12	NONE

sleep number

OPAQUE DARK BLUE VINYL
INSTALLED FIRST AND SECOND SURFACE

SOUTH ELEVATION

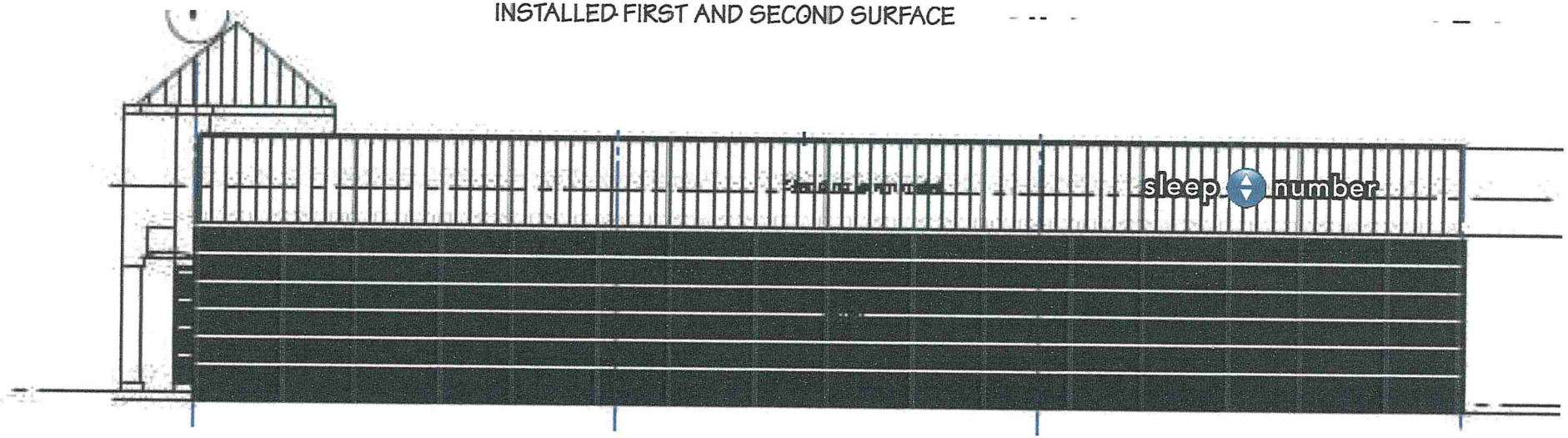

EAST ELEVATION

THESE SIGNS ARE 1.5 SQUARE FEET PER LINEAR FOOT. THIS HAS A MORE LIKELY CHANCE OF BEING APPROVED THAN PAGE 1 BUT WE WILL NOT KNOW FOR SURE UNTIL THE CITY REVIEWS THE LANDLORDS MASTER SIGN PLAN.

SEE PAGE 4
FOR SPECS

UNIVERSAL Signs INC.
1033 THOMAS AVE
ST. PAUL, MN 55104
ph 651-645-0223
fax 651-645-2531
www.universalsignsinc.com

LOCATION
SLEEP NUMBER
1723 COUNTY RD B2
ROSEVILLE, MN

DRAWN BY	REVISED
SEP	
DATE	SCALE
2/22/12	3/32" = 1'-0"

sleep number

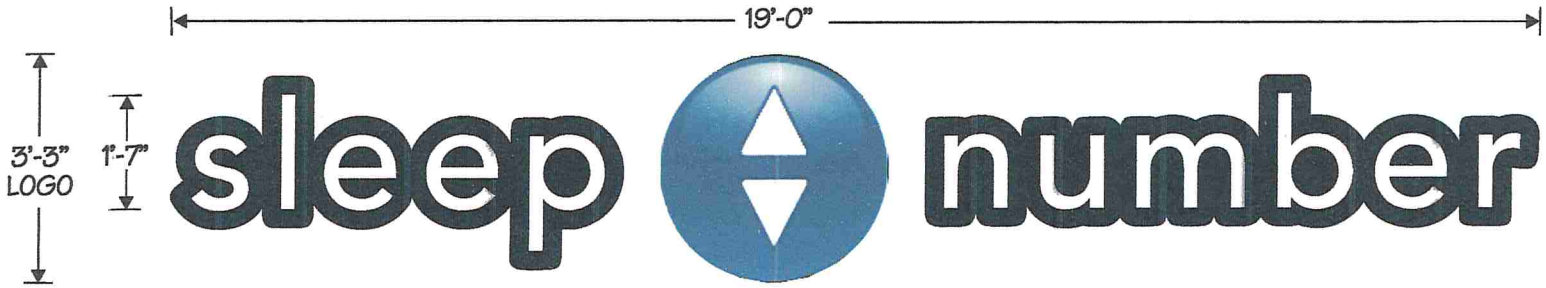

STORE FRONT SIGN 61.75 SQUARE FEET
3/8" = 1'-0"

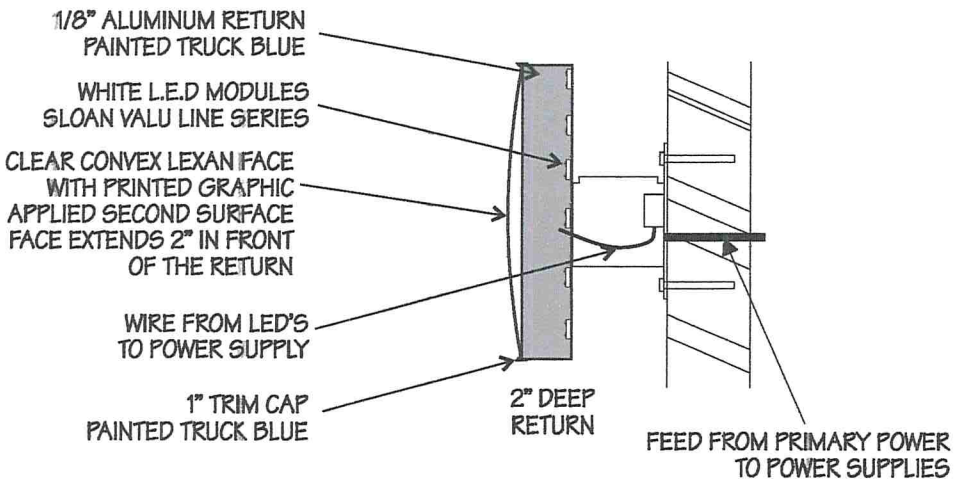

SECTION THROUGH LOGO
NO SCALE

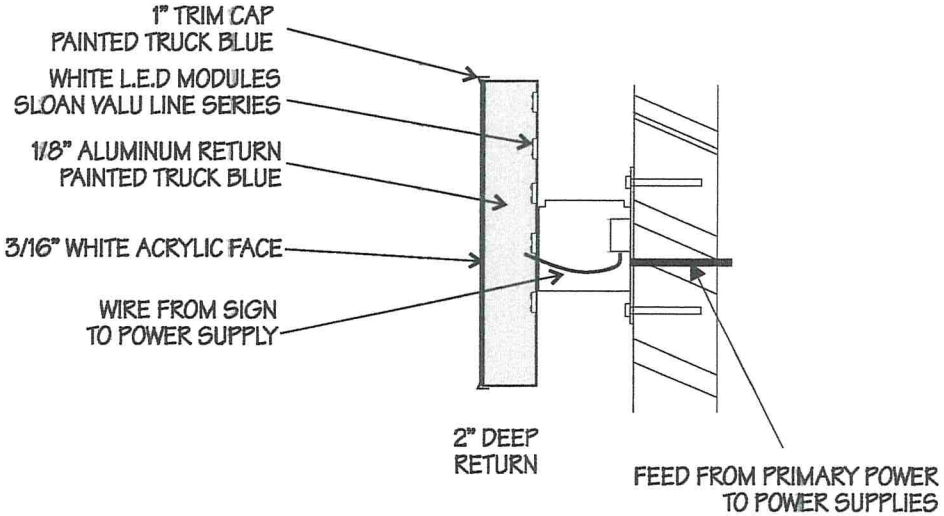

SECTION THROUGH LETTER
NO SCALE

UNIVERSAL Signs INC.
1033 THOMAS AVE
ST. PAUL, MN 55104
ph 651-645-0223
fax 651-645-2531
www.universalsignsinc.com

LOCATION	PAGE 4	DRAWN BY	REVISED
SLEEP NUMBER 1723 COUNTY RD B2 ROSEVILLE, MN		SEP	
		DATE 2/22/12	SCALE NOTED

sleep number

UNIVERSAL Signs INC.
1033 THOMAS AVE
ST. PAUL, MN 55104
ph 651-645-0223
fax 651-645-2531
www.universalsignsinc.com

LOCATION
SLEEP NUMBER
1723 COUNTY RD B2
ROSEVILLE, MN

PAGE 2

DRAWN BY	REVISED
SEP	
DATE	SCALE
2/22/12	NONE

sleep number

OPAQUE DARK BLUE VINYL
INSTALLED FIRST AND SECOND SURFACE

SOUTH ELEVATION

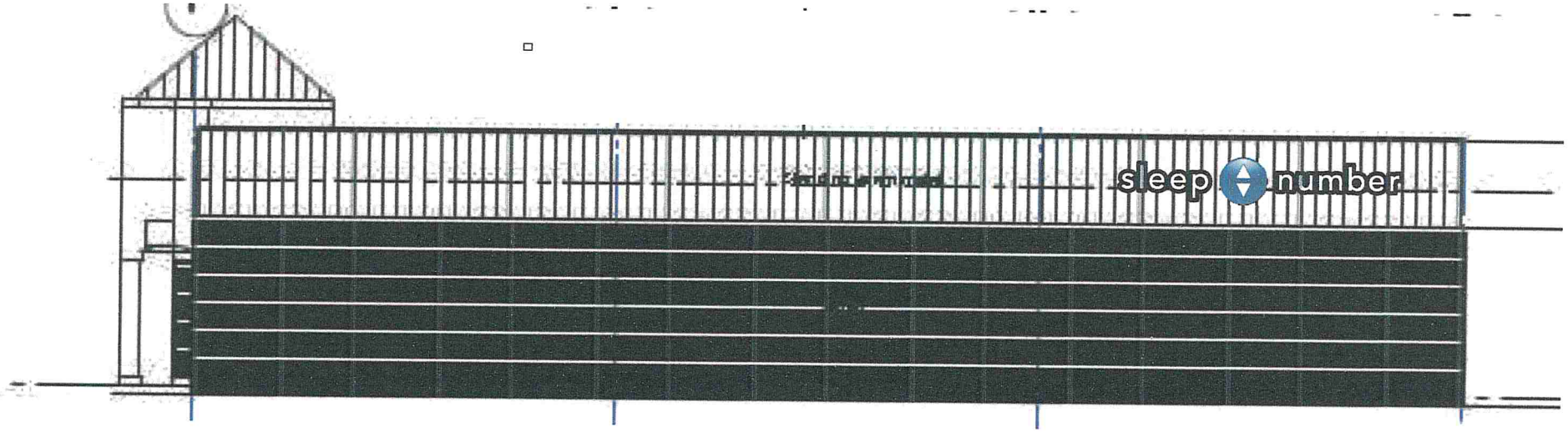

EAST ELEVATION

THIS IS WHAT THE LANDLORD IS PROPOSING IN THEIR MASTER SIGN PLAN 2.5 SQUARE FEET PER LINEAR FOOT.
IT IS NOT LIKELY TO PASS BUT IF IT DOES THIS WOULD BE THE MAXIMUM ALLOWED SIGNAGE PER THE LL

SEE PAGE 4
FOR SPECS

UNIVERSAL Signs INC.
1033 THOMAS AVE
ST. PAUL, MN 55104
ph 651-645-0223
fax 651-645-2531
www.universalsignsinc.com

LOCATION
SLEEP NUMBER
1723 COUNTY RD B2
ROSEVILLE, MN

PAGE 1

DRAWN BY	REVISED
SEP	
DATE	SCALE
2/22/12	3/32" = 1'-0"

sleep number

MATTRESS FIRM

Rosedale

Sign A

Sign:	33" Mattress Firm
Sign Type:	Channel Letters on a Raceway w/ Backer Panel
Illumination:	Internally Illuminated LED
Square Footage:	87.09
To Grade:	Top of Sign To Grade = 24'- 11 1/2" Bottom of Sign To Grade = 21'-0 1/4"

Sign B

Sign:	27" Mattress Firm
Sign Type:	Channel Letters on a Raceway w/ Backer Panel
Illumination:	Internally Illuminated LED
Square Footage:	58.33
To Grade:	Top of Sign To Grade = 16'-9 5/8" Bottom of Sign To Grade = 13'-7"

Sign C

Sign:	Mattress Firm SuperCenter
Sign Type:	Lexan panels with applied vinyl to be supplied by others
Actual Size:	TBD
Viewable Size:	TBD
Square Footage:	TBD

NOTE: DRAWING IS FOR REPRESENTATIONAL PURPOSES ONLY. EXACT DIMENSIONS (FIELD SURVEY) REQUIRED PRIOR TO FABRICATION.

MATTRESS FIRM	Client: Mattress Firm Site #: MF-A15694 Address: 1723 Country Road B 2 West Roseville, MN 55113 Rosedale	REVISION INFO	01/18/2012	Original Rendering	BC
			03/29/2012	Redrew Elevation Renderings	BC

AnchorSign.
1.800.213.3331

Sign A	
Sign:	30" Mattress Firm linear
Sign Type:	Channel Letters on a Raceway w/ Backer Panel
Illumination:	Internally Illuminated LED
Square Footage:	92.00
To Grade:	Top of Sign To Grade = 17'-5 1/4" Bottom of Sign To Grade = 13'-11 1/4"

Existing

NOTE: DRAWING IS FOR REPRESENTATIONAL PURPOSES ONLY. EXACT DIMENSIONS (FIELD SURVEY) REQUIRED PRIOR TO FABRICATION.

Jefferson House A1810

Hale Village A1827

Allowable Square Footage this Elevation:	142.50
Formula: Allowed 1.5 square feet per linear foot of store front for entire building 1.5 x 95 = 142.50	
Actual Square Footage this Elevation:	92.00

MATTRESS FIRM

Client: Mattress Firm
Site #: MF-A15694
Address: 1723 Country Road B 2 West
Roseville, MN 55113
Rosedale

REVISION INFO		
01/18/2012	Original Rendering	BC
03/29/2012	Redrew Elevation Renderings	BC

AnchorSign.
1.800.213.3331

Sign B	
Sign:	27" Mattress Firm
Sign Type:	Channel Letters on a Raceway w/ Backer Panel
Illumination:	Internally Illuminated LED
Square Footage:	58.33
To Grade:	Top of Sign To Grade = 16'-9 5/8" Bottom of Sign To Grade = 13'-7"

Existing

NOTE: DRAWING IS FOR REPRESENTATIONAL PURPOSES ONLY. EXACT DIMENSIONS (FIELD SURVEY) REQUIRED PRIOR TO FABRICATION.

Jefferson House A1810

Hale Village A1827

Allowable Square Footage this Elevation:	142.50
Formula: Allowed 1.5 square feet per linear foot of store front for entire building 1.5 x 95 = 142.50	
Actual Square Footage this Elevation:	58.33

MATTRESS FIRM

Client: Mattress Firm
Site #: MF-A15694
Address: 1723 Country Road B 2 West
Roseville, MN 55113
Rosedale

REVISION INFO		
01/18/2012	Original Rendering	BC
03/29/2012	Redrew Elevation Renderings	BC

AnchorSign.
1.800.213.3331

Sign A	
Sign:	30" Mattress Firm linear
Sign Type:	Channel Letters on a Raceway w/ Backer Panel
Illumination:	Internally Illuminated LED
Square Footage:	92.00
To Grade:	Top of Sign To Grade = 17'-5 1/4" Bottom of Sign To Grade = 13'-11 1/4"

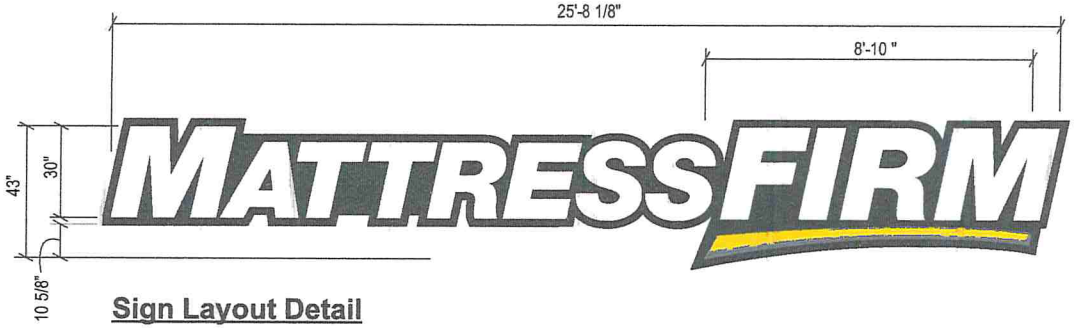

Sign Layout Detail

Scale: 1/4" = 1'-0"

Electrical Detail:

Agilight Tuffrayz White led's
( ) Xitanium transformers
Total Amps:
( ) 20 amp 120V Circuit Req.

General Notes:

This sign is to be installed in accordance with the requirements of Article 600 of the National Electrical Code.

1) Grounded and bonded per NEC 600.7/NEC 250
2) Existing branch circuit in compliance with NEC 600.5, not to exceed 20 amps
3) Sign is to be UL listed per NEC 600.3
' IL disconnect switch per NEC 600.6- required per ign component before leaving manufacturer*
*For multiple signs, a disconnect is permitted but not required for each section

NOTE: DRAWING IS FOR REPRESENTATIONAL PURPOSES ONLY. EXACT DIMENSIONS (FIELD SURVEY) REQUIRED PRIOR TO FABRICATION.

Specifications: Channel Letters/ Backer panel/ Raceway

1. Existing Facade: TBD
2. 0.040" Aluminum letter returns painted to match black
3. 0.125" x 1" trim cap to match black
4. 3mm Signabond Lite composite backs
   (interior of sign can painted ultra white for maximum illumination)
5. White LED's
6. 3/16" acrylic faces;
   - R&H #7328 White acrylic for letters
   - R&H #2016 Yellow for "Swoosh" w/
     - 3m #7725-12 Gloss Black vinyl 'drop shadow' on swoosh
7. Waterproof disconnect switch per NEC 600-6
8. Primary electrical feed
9. Transformers
10. 0.080" Aluminum raceway painted to match the facade
11. 15" x 2" x 0.1875" Aluminum mounting tabs welded to raceway
    - Maximum 6" from each end and every 48" o.c.
12. #12 x 1" TEC screws with 11/4" fender washers
13. Mounting hardware to suit
14. 0.080" Backer panel painted to match black

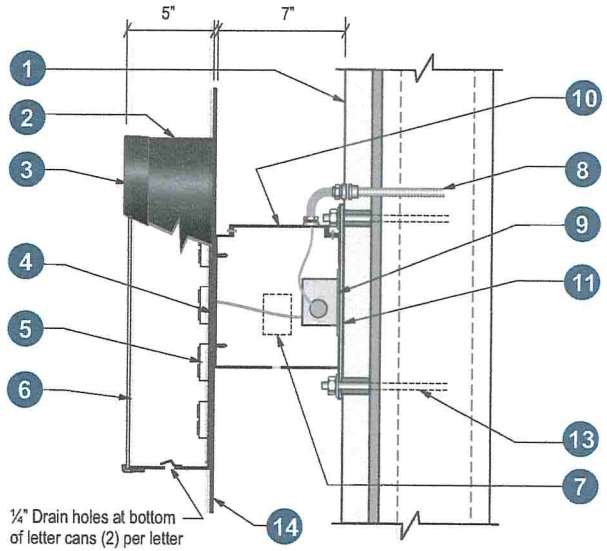

Section @ LED Channel Letter

Backer Panel / Raceway Scale: N.T.S.

Client:	Mattress Firm
Site #:	MF-A15694
Address:	1723 Country Road B 2 West
	Roseville, MN 55113
	Rosedale

REVISION INFO		
01/18/2012	Original Rendering	BC
03/29/2012	Redrew Elevation Renderings	BC

AnchorSign.
1.800.213.3331

Sign B	
Sign:	27" Mattress Firm
Sign Type:	Channel Letters on a Raceway w/ Backer Panel
Illumination:	Internally Illuminated LED
Square Footage:	58.33
To Grade:	Top of Sign To Grade = 16'-9 5/8" Bottom of Sign To Grade = 13'-7"

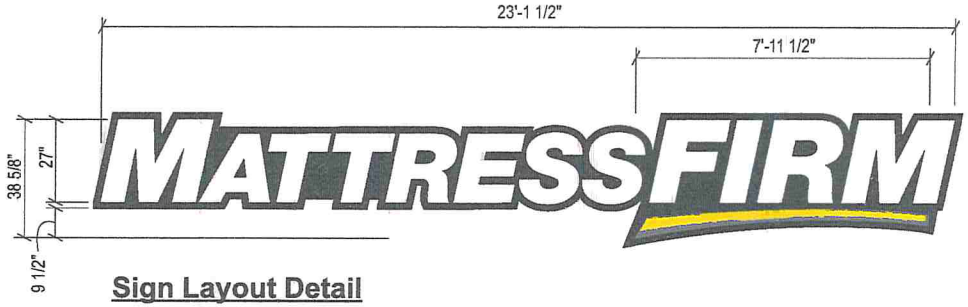

Sign Layout Detail

Scale: 1/4" = 1'-0"

Electrical Detail:

Agilight Tuffrayz White led's
( ) Xitanium transformers
Total Amps:
( ) 20 amp 120V Circuit Req.

General Notes:

This sign is to be installed in accordance with the requirements of Article 600 of the National Electrical Code.

1) Grounded and bonded per NEC 600.7/NEC 250
2) Existing branch circuit in compliance with NEC 600.5, not to exceed 20 amps
3) Sign is to be UL listed per NEC 600.3
4) UL disconnect switch per NEC 600.6- required per sign component before leaving manufacturer*
*For multiple signs, a disconnect is permitted but not required for each section

NOTE: DRAWING IS FOR REPRESENTATIONAL PURPOSES ONLY. EXACT DIMENSIONS (FIELD SURVEY) REQUIRED PRIOR TO FABRICATION.

Specifications: Channel Letters/ Backer panel/ Raceway

1. Existing Facade: TBD
2. 0.040" Aluminum letter returns painted to match black
3. 0.125" x 1" trim cap to match black
4. 3mm Signabond Lite composite backs (interior of sign can painted ultra white for maximum illumination)
5. White LED's
6. 3/16" acrylic faces;
   - R&H #7328 White acrylic for letters
   - R&H #2016 Yellow for "Swoosh" w/
     - 3m #7725-12 Gloss Black vinyl 'drop shadow' on swoosh
7. Waterproof disconnect switch per NEC 600-6
8. Primary electrical feed
9. Transformers
10. 0.080" Aluminum raceway painted to match the facade
11. 15" x 2" x 0.1875" Aluminum mounting tabs welded to raceway - Maximum 6" from each end and every 48" o.c.
12. #12 x 1" TEC screws with 11/4" fender washers
13. Mounting hardware to suit
14. 0.080" Backer panel painted to match black

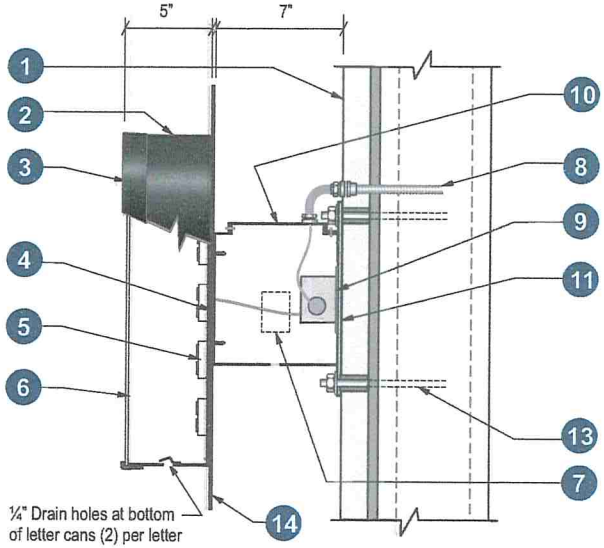

Section @ LED Channel Letter

Backer Panel / Raceway Scale: N.T.S.

Client:	Mattress Firm
Site #:	MF-A15694
Address:	1723 Country Road B 2 West
	Roseville, MN 55113
	Rosedale

REVISION INFO		
01/18/2012	Original Rendering	BC
03/29/2012	Redrew Elevation Renderings	BC

AnchorSign.
1.800.213.3331

Sign C	
Sign:	Mattress Firm SuperCenter
Sign Type:	Lexan panels with applied vinyl to be supplied by others
Actual Size:	TBD
Viewable Size:	TBD
Square Footage:	TBD

Applied Vinyl to Existing Panel

Qty. 2 (1 Set) N.T.S.

Pylon Elevation

N.T.S.

NOTE: DRAWING IS FOR REPRESENTATIONAL PURPOSES ONLY. EXACT DIMENSIONS (FIELD SURVEY) REQUIRED PRIOR TO FABRICATION.

MATTRESS FIRM

Client: Mattress Firm
Site #: MF-A15694
Address: 1723 Country Road B 2 West
Roseville, MN 55113
Rosedale

REVISION INFO		
01/18/2012	Original Rendering	BC
03/29/2012	Redrew Elevation Renderings	BC

AnchorSign.
1.800.213.3331

Perry Bolin Architecture, PLLC
Perry Bolin, AIA, NCARB, LEED AP

Memorandum

Date: 02/16/2012 Revised 04/04/12
By: Perry Bolin (PBA)
To: Mark Abramovitz
Project: 1723 County Road B, Roseville

Subject: Master Sign Plan Calculation - Mattress Firm, Select Comfort, & TBD

Master Sign Plan required by the City of Roseville Thomas Pashke 651-792-7005

The MAXIMUM allowable area of wall signs is 1.5 sf x 1.5 = up to 2.25 sf per front foot of the building for each tenant. Total allowable for all sides of the building. Total Wall Sign area 2.25 x 196 LF = 441 sf maximum allowable.

Wall Signs

Mattress Firm 99 lf x 2.25 = 222 SF of total wall sign area allowable
Proposed A 92 SF +B 58.33 = 150.33 SF

Sleep Express 56 lf x 2.25 = 125 sf of total wall sign area allowable
Proposed S 61.75 + E 42 = 103.75

To be determined 41 lf x 2.25 = 92 sf of total wall sign area allowable
Proposed S 54 + N 32 =86 SF

Total Wall Sign area = 441 sf MAXIMUM
Proposed 150.33 + 103.75 + 86 = 340 SF = 77% of allowable

Freestanding Signs

Up to 150 SF for 3 tenants, maximum height 25 ft
Existing sign is 5 x 15' = 75 SF + 32 sf = 107 SF +/- , 20height +/-

Proposed Mattress Firm Sign C Freestanding Existing upper sign 5 x 15' = 75 SF
Proposed Select Comfort Freestanding lower sign = ½ x 32 sf = 16 SF
Proposed TBD Freestanding lower sign = ½ x 32 sf = 16 SF
Proposed Total 107 +/- SF (Existing Sign Area) = 71.33% of allowable

(651) 208- 1798 5009 Quail Ave. N. Minneapolis, MN 55429 perryb@usfamily.net

Mattress Firm Sign Proposal

Sign A South 25'8" ft long = 92 sf
Sign B West 23' 1 ½" ft long = 58.33 sf

Sign C Freestanding Existing upper sign 5 x 15' = 75 SF

Select Comfort Sign Proposal

56 lf x 2.25 = 125 sf of total wall sign area
Proposed South 61.75 SF
Proposed East 42 SF

Freestanding lower sign = ½ x 32 sf = 16 SF

Future Tenant Signs
41 lf x 2.25 = 92 sf of total wall sign area
Proposed South 54 SF
Proposed North 32 SF

Freestanding Sign - ½ x 32 sf = 16 SF

(651) 208- 1798 5009 Quail Ave. N. Minneapolis, MN 55429 perryb@usfamily.net

SURVEY FOR: FLAME DEVELOPMENT COMPANY

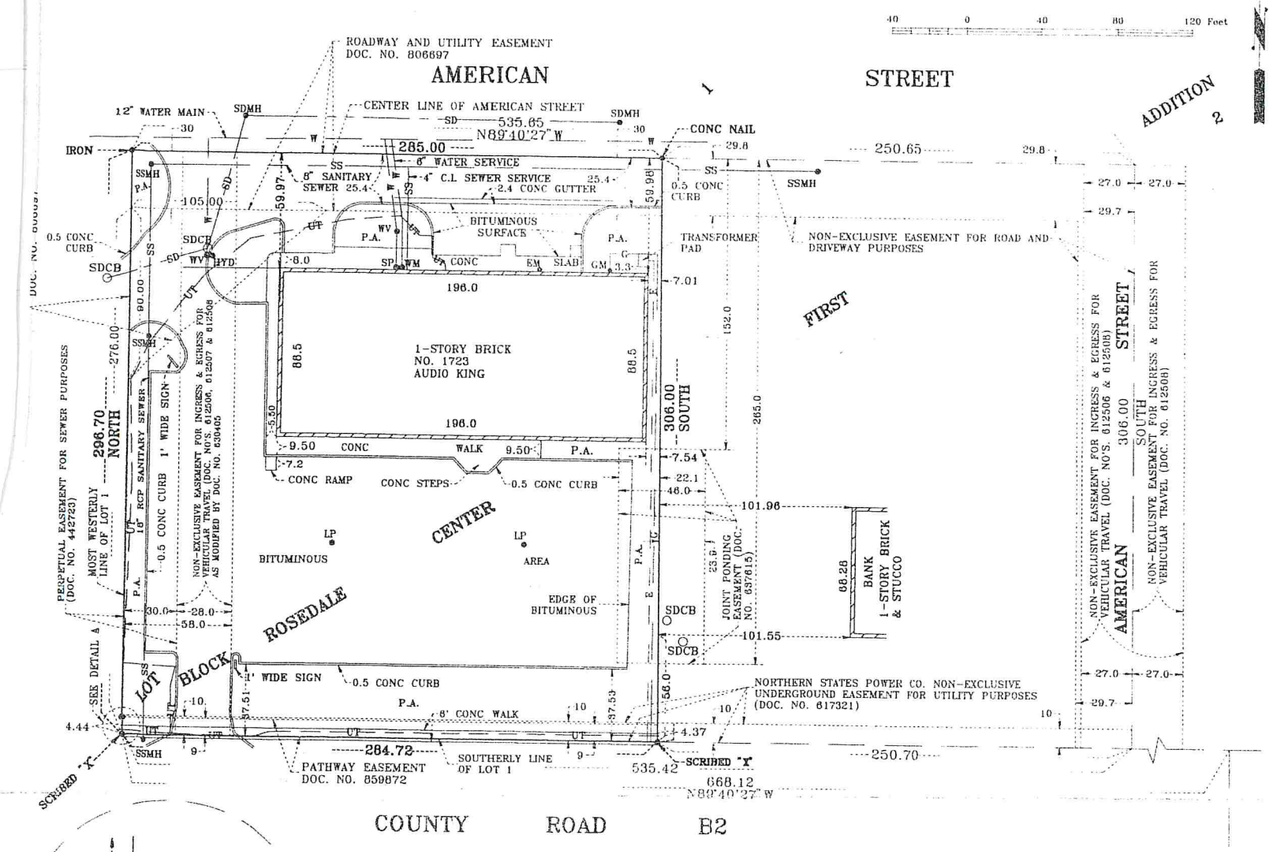

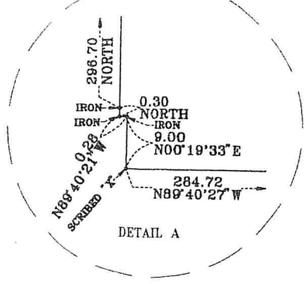

DETAIL A

NOTES:
1) ALL BEARINGS SHOWN ARE BASED ON THE BEARINGS SHOWN ON THE PLAT OF ROSEDALE CENTER FIRST ADDITION.
2) ALL UTILITY INFORMATION SHOWN IS BASED UPON AVAILABLE INFORMATION.
3) MINNESOTA STATE STATUTE 216-D REQUIRES NOTIFICATION OF AN UNDERGROUND LOCATOR SYSTEM CALLED "GOPHER ONE-CALL" (612-454-0002) FOR UNDERGROUND UTILITY LOCATIONS PRIOR TO ANY EXCAVATION.
4) ALL EASEMENTS SHOWN ARE AS PER CERTIFICATE OF TITLE NO. 639522 DATED JULY 1, 1996

Legal Description:

All that part of Lot 1, Block 2, ROSEDALE CENTER FIRST ADDITION, lying Westerly of a line drawn parallel with and 285.00 feet Easterly of, as measured at right angles to, the most Westerly line of said Lot 1 and lying Southerly of a line drawn parallel with and 306.00 feet Northerly of, as measured at right angles to, that portion of the Southerly line of said Lot 1 which has a bearing of S 89 degrees 40 minutes 27 seconds E and a distance of 668.12 feet on the recorded plat of said ROSEDALE CENTER FIRST ADDITION.

Subject to and together with easements for joints ponding as shown as shown in Document No. 637615.

Subject to a Easement for Roadway and Utilities as described in Document No. 806697.

Together with a non-exclusive easement for road and driveway purposes over the East 29.7 feet and the North 29.8 feet of that part of said Lot 1 as described in Documents No's 612506 & 612508.

Subject to and together with easements and restrictions of record.

I hereby certify that this survey is made in accordance with the "Minimum Standard Detail Requirements" for ALTA/ACSM Land Title Survey jointly established and adopted by the ALTA/ACSM in 1992 and meets the accuracy requirements for an urban survey as defined therein.

LEGEND:

•	DENOTES PROPERTY CORNER.
• WV	DENOTES WATER VALVE.
• WM	DENOTES WATER METER.
• HYD	DENOTES FIRE HYDRANT.
• GM	DENOTES GAS METER.
• EM	DENOTES ELECTRIC METER.
• LP	DENOTES LIGHT POLE.
• SP	DENOTES STAND PIPE.
—UT—	DENOTES UNDERGROUND TELEPHONE LINE.
○ SDCB	DENOTES STORM CATCH BASIN.
• SDMH	DENOTES STORM MANHOLE.
—SD—	DENOTES STORM SEWER.
• SSMH	DENOTES SANITARY SEWER MANHOLE.
—SS—	DENOTES SANITARY SEWER.
—E—	DENOTES ELECTRIC LINE.
P.A.	DENOTES PLANTING AREA.
ENC.	DENOTES ENCROACHMENT PROPERTY LINE.

I hereby certify that this survey, plan, or report was prepared by me or under my direct supervision and that I am a duly Registered Land Surveyor under the laws of the State of Minnesota.

John Coulter Peterson

Date 8/6/96 Reg. No. 13792

NOTE: THIS SURVEY CERTIFICATE IS NOT VALID WITHOUT AN ORIGINAL SIGNATURE AND A RAISED SEAL.

DATE 8/6/96	C. E. COULTER & ASSOCIATES, INC.	SCALE 1" = 40'
REVISIONS	PROFESSIONAL REGISTERED SURVEYORS REG. IN MINN., WISC. & IOWA	JOB NO. 11,551
		BK./PG. 960/72
	P.O. BOX 8206 MINNEAPOLIS, MINNESOTA 55408-0906 TELEPHONE 612-824-0320 FAX 612 933 3074	FILE NO. 3 8 120
		SHEET 1 OF 1

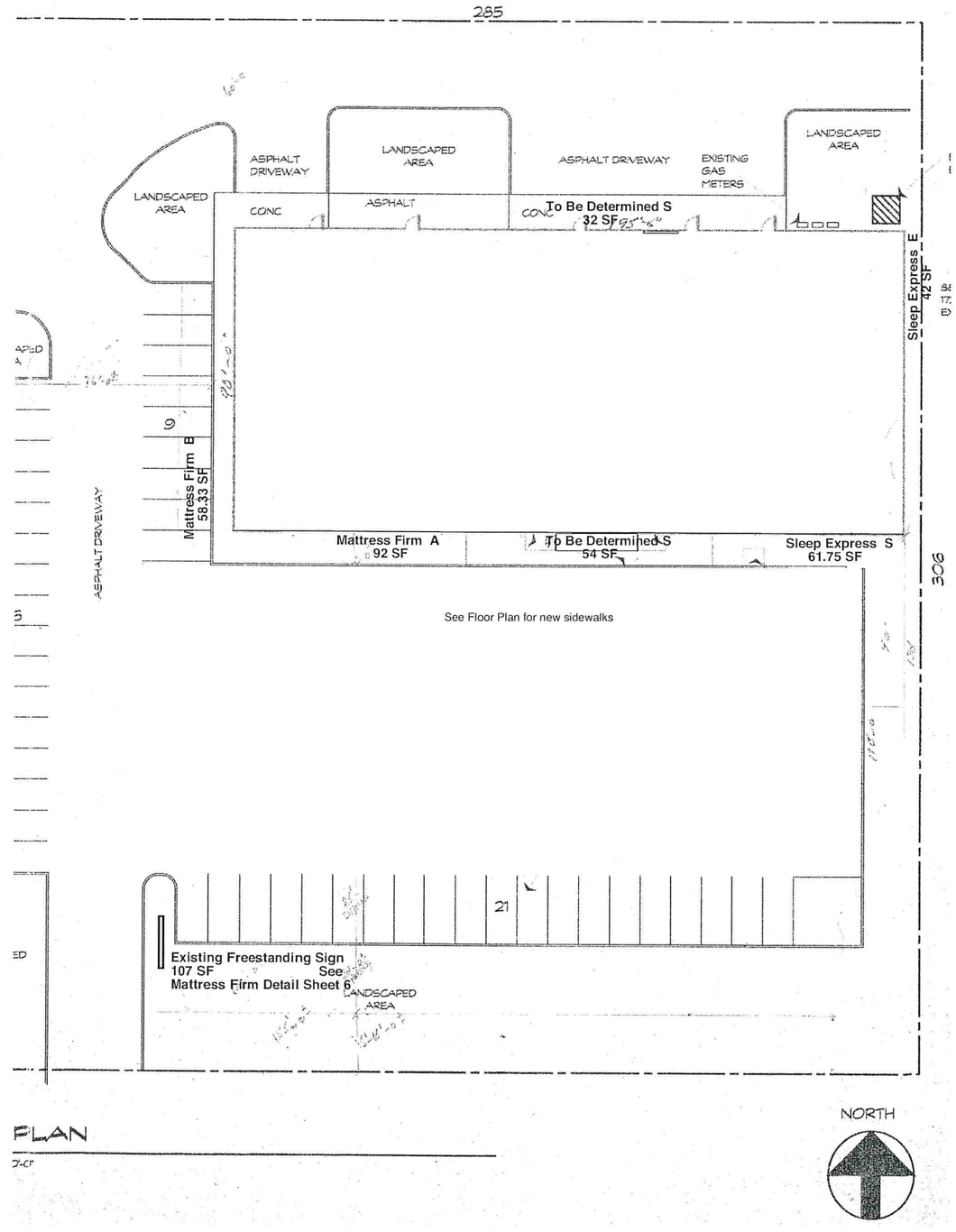

PLAN

Perry Bolin Architecture PLLC
5009 Quail N. Mpls, MN 55429
P: 651.208.1798
F: 612.728.8351
© 2012 E: perryb@ustamily.net

I hereby certify that this plan, specification or report was prepared by me or under my direct supervision and that I am a duly Licensed Architect under the laws of the State of Minnesota.

Perry R. Bolin Reg. No. 1734 Date: 03/16/12

Owner:
FLAME DEVELOPMENT COMPANY
1660 South Hwy 100
St. Louis Park, MN 55416
952-893-0729

03/16/12 Permit Set

Exterior Renovaton & Tenant Demising Walls for Mattress Firm & Select Comfort
1723 County Road B2
St. Paul, MN 55113

SHEET 1

ROSEVILLE
Community Development Department
651-792-7074 ◆ fax: 651-792-7070

June 11, 2012

Mr. Mark Abramovitz
Flame Development Company
1660 South Highway 100
Suite 532
St. Louis Park, MN 55416

Mr. Perry Bolin
5009 Quail Avenue North
Minneapolis, MN 55426

Re: 1723 County Road B2 - Master Sign Plan Approval

On May 10, 2012, the Roseville Master Sign Plan Committee held the administrative hearing to review and consider the Master Sign Plan 1723 County Road B2. No adjacent property owners or citizens were present to address the committee and the City Planner did not receive any calls, email, or letters concerning the proposal.

The MSP Committee has reviewed the proposal and approves the following as the MSP for 1723 County Road B2:

WALL SIGN REQUIREMENTS

- Advertising, flashing, pulsating, rotating light (or lights), rooftop, banners, mobile signs, and portable signs shall be prohibited, as well as other prohibited signs covered under Section 1010 of the Roseville City Code.
- Wall signs shall be limited to total of 392 square feet calculated as follows – 2 sq. ft. of signage for each lineal foot of building front times 196 lineal feet equals 392 total square feet of allowable building wall signage.
- Wall signs meeting the total square footage allowed, can be installed on all four sides of the building.
- Wall signs (including identity logos and/or symbols) shall be individual or channel letters that may be illuminated, have finished returns and/or be installed on raceways, and shall not exceed 36 inches in height.
- Letter returns and raceways may be painted, prefinished, or utilize exposed metal; and exposed metal shall be stainless steel, titanium, bronze, aluminum, or other non-corrosive material.
- Sign panels/cabinets may be used in place of individual or channel letters.

- Sign panels/cabinets may be used in place of individual or channel letters.
- Sign material shall be limited to metal and acrylic with UV inhibitors. All materials shall be made of high quality durable materials and finishes, and be of the highest quality fabrication.
- Window graphics/signs shall be limited to 25% of the window area.

FREESTANDING SIGN REQUIREMENTS

- The site shall be allowed to refurbish the existing freestanding sign along County Road B2. The sign shall be limited to three sign panels totaling 120 sq. ft. and of the following dimensions - 5 feet by 15 feet or 75 sq. ft., 2-1/2 feet by 12 feet or 30 sq. ft., and 2 feet by 7-1/2 feet or 15 sq. ft. or a total of 120 sq. ft. for the sign. A 3 foot by 7-1/2 foot or 22.5 sq. ft. temporary leasing sign shall also be installed on the sign (see attached illustration)
- The existing freestanding sign shall also include an update metal panel which encases the pole.
- Should the property owner desire to replace the existing freestanding sign, the following requirements shall apply: the sign shall be allowed to be constructed 7 to 10 feet away from the easement/property line, be a maximum of 25 feet in height, and be of a monument style complete with a base of brick, block and/or stone. Signage shall be limited to 120 square feet equally distributed among the three tenants. Final plans for this sign to be reviewed and approved by the Planning Division
- Should the property owner desire a second freestanding sign adjacent to American Street, the following requirements shall apply: the sign shall have a minimum setback of 5 feet from the property line, be limited to a height of 8 feet, and including no greater than 60 sq. ft. of signage – three equal sized tenant spaces of 20 sq. ft. Final plans shall be reviewed and approved by the Planning Division.
- Leasing information shall be incorporated into one or both freestanding signs (such as contact name and number), which shall not count against the sign total. On option is a wall sign not exceeding 24 sq. ft. being placed on the building. No freestanding leasing sign are permitted on the premises.

OTHER REQUIREMENTS

- Landlord//owner sign-off of any sign proposal shall accompany any sign permit and shall meet the requirements of the MSP.
- A sign permit is required for the installation of all signs on the premises.

Community Development Department
651-792-7074 ◆ fax: 651-792-7070

Should you have any questions or comments, please call me at 651-792-7074.

Respectfully,

CITY of ROSEVILLE

Thomas Paschke
City Planner

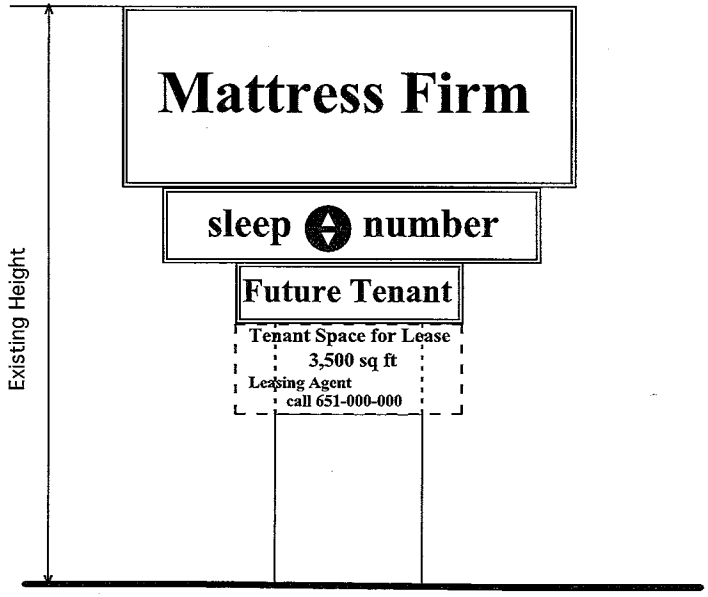

Double faced signs

Existing Mattress Firm Sign 5'-0" x 15'-0"		75 Sq Ft
Sleep Number Sign with logo 2'-6" x 12'-0"		30 Sq Ft
Future Tenant Sign 2'-0" x 7'-6"		15 Sq Ft
	Total	120 Sq Ft
Temporary leasing sign 3'-0" high and 7'-6" wide		22.5 Sq Ft

Pylon and Temporary Leasing Signs

6/5/12

Flame Development
1723 County Road B, Roseville MN 5513
Prime General Contractors
1001 East Cliff Road, Ste 302., Burnsville, MN 55337 952-746-3637

 Perry R. Bolin, Architect, NCARB, LEED AP
5009 Quail Ave. N., Minneapolis, MN 55429 perryb@usfamily.net 651-208-1798

1d

ROSEVILLE

COMMUNITY DEVELOPMENT

2660 Civic Center Drive ❖ Roseville, MN 55113
Phone: (651) 792-7005 ❖ Fax: (651) 792-7070

MASTER SIGN PLAN APPLICATION

CITY CODE SECTION 1010.03
www.ci.roseville.mn.us

☐ **RESIDENTIAL APPLICATION FEE: $250**

☒ **COMMERCIAL APPLICATION FEE: $350**

Fee should be made payable to City of Roseville upon submittal of application.

Please complete the application by typing or printing in ink. Use additional paper if necessary.

1. **Property Owner Information:** Flame Development Company, LLP
   Last name: Abramovitz *First name:* Mark
   Address: 1660 South Highway 100, Ste. 532 *City/State/Zip:* St. Louis Park, MN 55416
   Phone number: (952) 893-0729 *Email address:* brimar1036@yahoo.com
2. **Applicant Information:** *(if different from above)*
   Company name: Perry Bolin Architecture, PLLC
   Last name: Bolin *First name:* Perry
   Address: 5009 Quail Avenue North *City/State/Zip:* Minneapolis, MN 55429
   Phone number: (651) 208-1798 *Email address:* perryb@usfamily.net
3. **Address of Property Involved:** *(if different from above)*
   1723 County Road B2 West, Roseville, MN 55113
4. **Additional Required Information:**
   a. **Site plan** illustrating on-site improvements and location of proposed signage
   b. **Sign details** including sign dimensions, area calculations, and construction specifications for each sign being contemplated, as well as elevations showing wall signs and/or freestanding signs as appropriate
5. **Signature(s):** By signing below, you attest that the information above and attached is true and correct to the best of your knowledge.

Property Owner: Mark S Abramovitz *Date:* 04/04/2012

Applicant: Perry R Bolin *Date:* 04/04/2012

Perry Bolin Architecture, PLLC

Perry R. Bolin, AIA, NCARB, LEED AP
www.perrybolinarchitecture.com

5009 Quail Ave. N.
Minneapolis, MN 55429

(651) 208-1798
perryb@usfamily.net

PROGRAMS

Roseville. A Way of Life.

Living Smarter

Connect for a Lifetime of Healthy Living. Here in Roseville.

Welcome to the "Living Smarter" campaign—where we believe Roseville is not just a place to live, it is community that boasts a 'sustainable lifestyle.' And no matter where you're on the journey toward a sustainable, more environment-friendly life, we're here to help you along the way.

The "Living Smarter" campaign has been developed by the Roseville Housing & Redevelopment Authority (RHRA) to provide current residents, as well as those looking to move into the community, with resources that not only help protect our environment, but also to save money in the process.

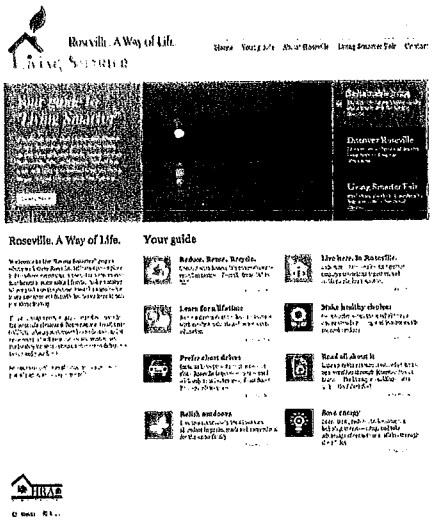

The all-new, easy-to-use www.LivingSmarter.org features resources that help you save money, connect with the healthy lifestyle options, and create a difference to you and your family. Feel free to set this as your browser's home page, or bookmark "Living Smarter," and check back frequently for the latest tips and features.

Your Guide features:

- » Reduce. Reuse. Recycle.
- » Learn for a lifetime
- » Prefer short drives
- » Relish outdoors
- » Live here. In Roseville.
- » Make healthy choices
- » Read all about it
- » Save energy

Making smarter choices about transportation doesn't necessarily mean buying a new, more fuel efficient car-it simply means learning how to drive less. Making home energy efficient doesn't necessarily mean costly renovations-it means incorporating best practices in landscaping, building or remodeling, and taking advtanage of programs and resources available to you and your family through the community. Living healthy needn't mean expensive specialty foods-it means being smarter about the kind of things you're already buying and looking for locally sourced produce. These changes may seem big and small, but 'Living Smarter' begins wherever you're right now.

So pour yourself a cup of coffee, grab a pen and a pad of paper and let's get started!

Access the "Living Smarter" resources at www.LivingSmarter.org

Contact
651.792.7015
hra@ci.roseville.mn.us

Location
Roseville Housing
and Redevelopment Authority
2660 Civic Center Drive
Roseville, MN 55113
www.cityofroseville.com/hra

HRA
Roseville Housing and Redevelopment Authority

For more information about the Living Smarter campaign, please visit www.LivingSmarter.org or contact 651.792.7015, or email info@livingsmarter.org.

City of Roseville
651-792-7000

04/09/2012 11:31
Receipt No. 00278702

signplan
Master Sign Pl
an 350.00

Receipt Total 350.00

Cash 0.00
Check 350.00 Check #3227
Charge 0.00

FLAME DEVELPMENT

'

Cashier: jill.hughes
Station: RVFIN701

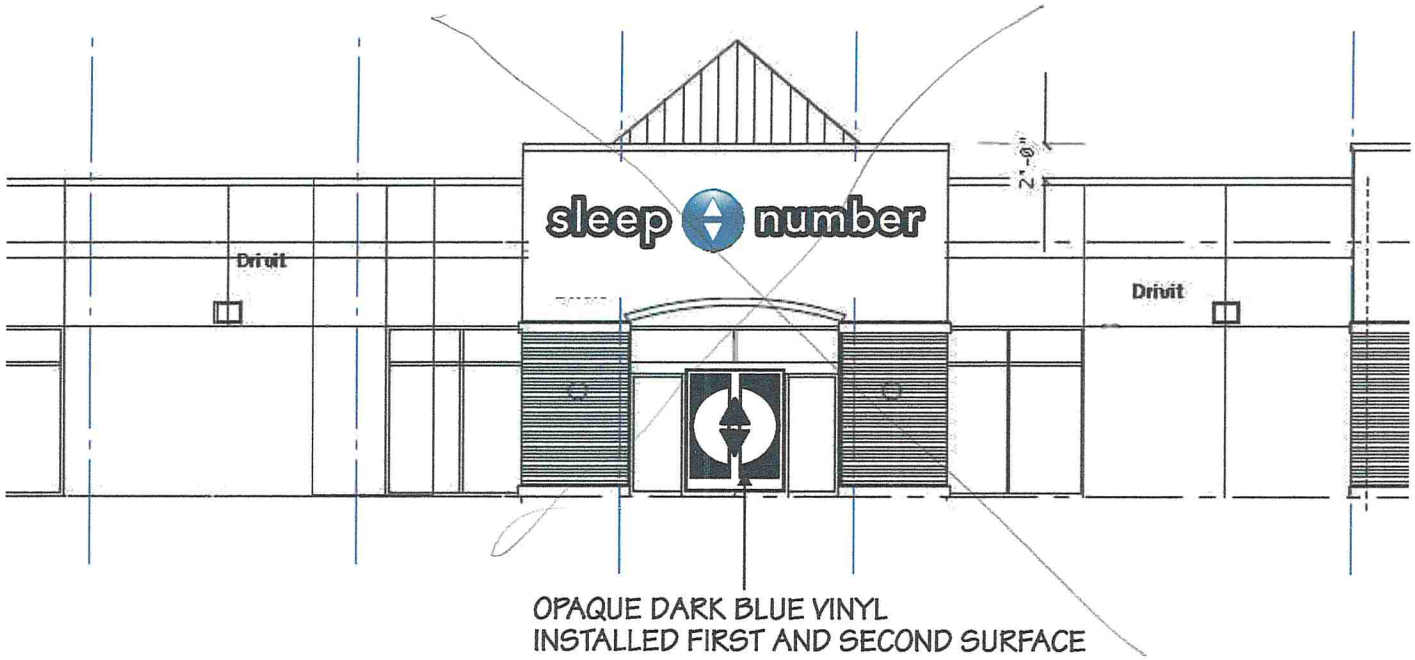

THESE SIGNS ARE 1.5 SQUARE FEET PER LINEAR FOOT. THIS HAS A MORE LIKELY CHANCE OF BEING APPROVED THAN PAGE 1 BUT WE WILL NOT KNOW FOR SURE UNTIL THE CITY REVIEWS THE LANDLORDS MASTER SIGN PLAN.

SEE PAGE 10
FOR SPECS

UNIVERSAL Signs INC.
1033 THOMAS AVE
ST. PAUL, MN 55104
ph 651-645-0223
fax 651-645-2531
www.universalsignsinc.com

LOCATION
SLEEP NUMBER
1723 COUNTY RD B2
ROSEVILLE, MN

DRAWN BY	REVISED
SEP	
DATE	SCALE
2/22/12	3/32" = 1'-0"

sleep number

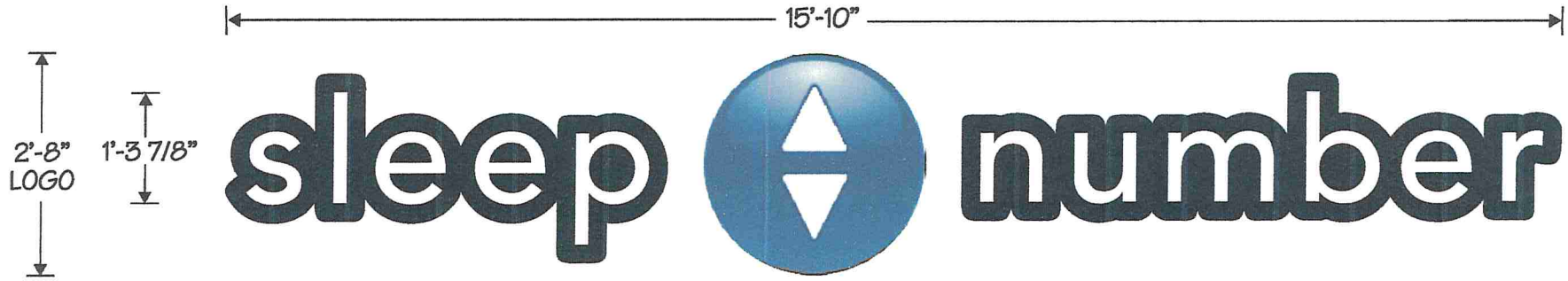

STORE FRONT SIGN 42 SQUARE FEET
1/2" = 1'-0"

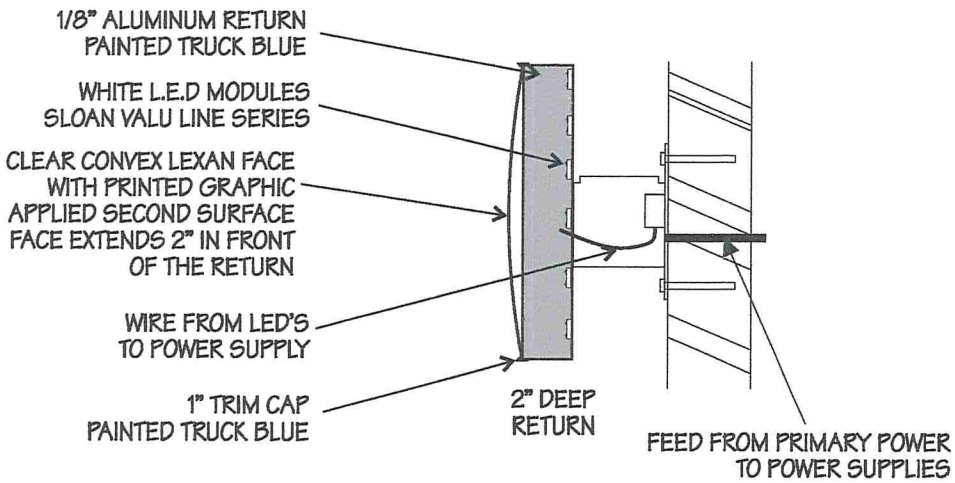

SECTION THROUGH LOGO
NO SCALE

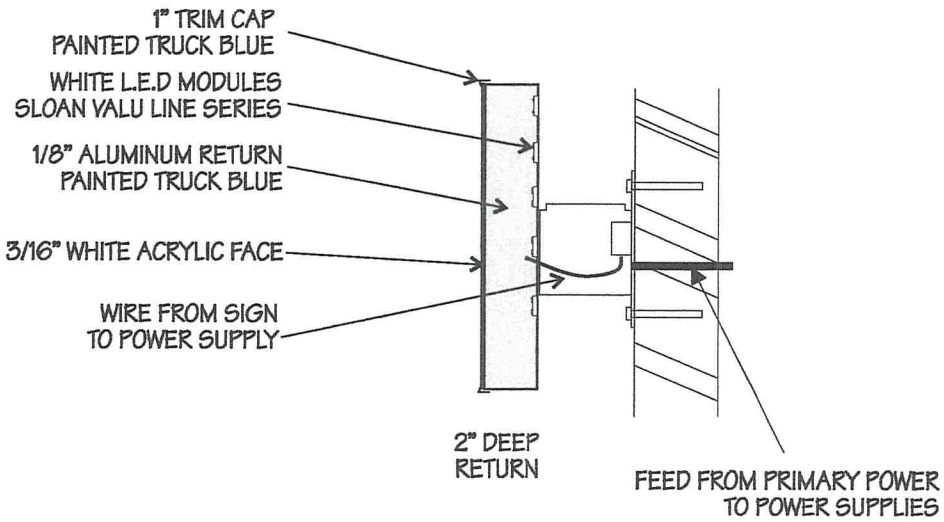

SECTION THROUGH LETTER
NO SCALE

UNIVERSAL Signs INC.
1033 THOMAS AVE
ST. PAUL, MN 55104
ph 651-645-0223
fax 651-645-2531
www.universalsignsinc.com

LOCATION	PAGE 8	DRAWN BY	REVISED
SLEEP NUMBER 1723 COUNTY RD B2 ROSEVILLE, MN		SEP	
		DATE	SCALE
		2/22/12	NOTED

sleep number

UNIVERSAL Signs INC.
1033 THOMAS AVE
ST. PAUL, MN 55104
ph 651-645-0223
fax 651-645-2531
www.universalsignsinc.com

LOCATION
SLEEP NUMBER
1723 COUNTY RD B2
ROSEVILLE, MN

PAGE 7

DRAWN BY	REVISED
SEP	
DATE	SCALE
2/22/12	NONE

sleep number

OPAQUE DARK BLUE VINYL
INSTALLED FIRST AND SECOND SURFACE

SOUTH ELEVATION

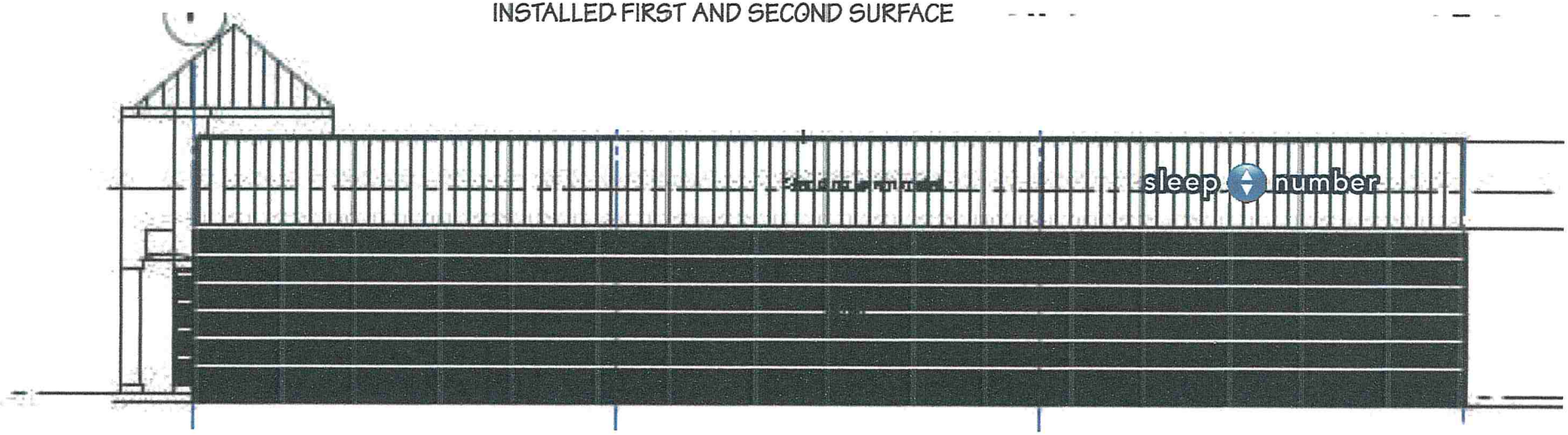

EAST ELEVATION

THESE SIGNS ARE 1.5 SQUARE FEET PER LINEAR FOOT. THIS HAS A MORE LIKELY CHANCE OF BEING APPROVED THAN PAGE 1 BUT WE WILL NOT KNOW FOR SURE UNTIL THE CITY REVIEWS THE LANDLORDS MASTER SIGN PLAN.

SEE PAGE 4
FOR SPECS

UNIVERSAL Signs INC.
1033 THOMAS AVE
ST. PAUL, MN 55104
ph 651-645-0223
fax 651-645-2531
www.universalsignsinc.com

LOCATION
SLEEP NUMBER
1723 COUNTY RD B2
ROSEVILLE, MN

DRAWN BY	REVISED
SEP	
DATE	SCALE
2/22/12	3/32" = 1'-0"

sleep number

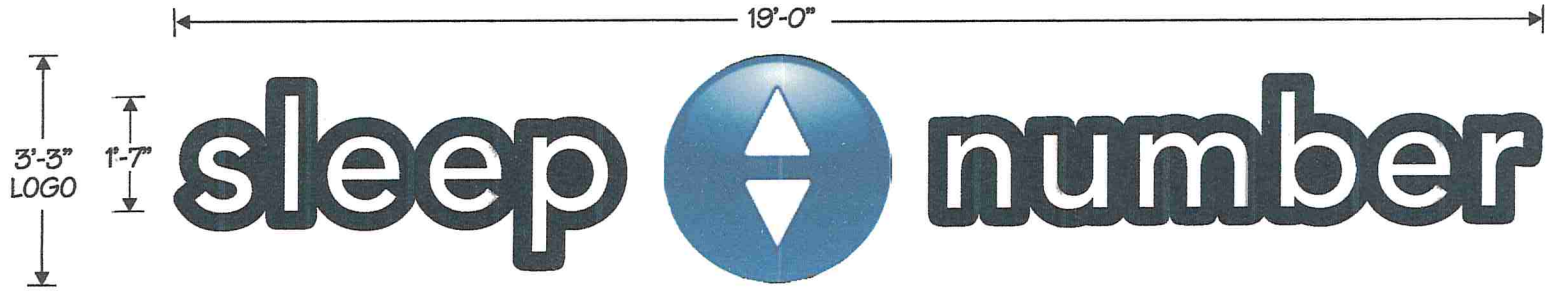

STORE FRONT SIGN 61.75 SQUARE FEET
3/8" = 1'-0"

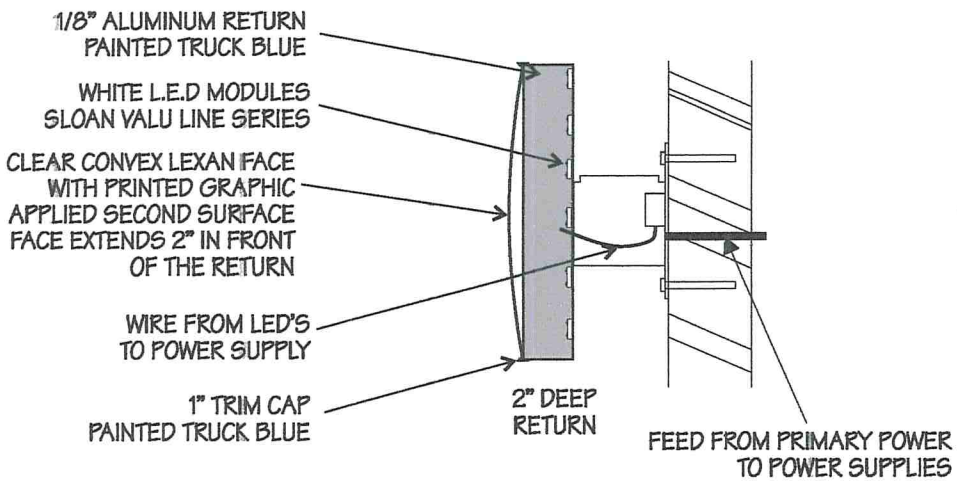

SECTION THROUGH LOGO
NO SCALE

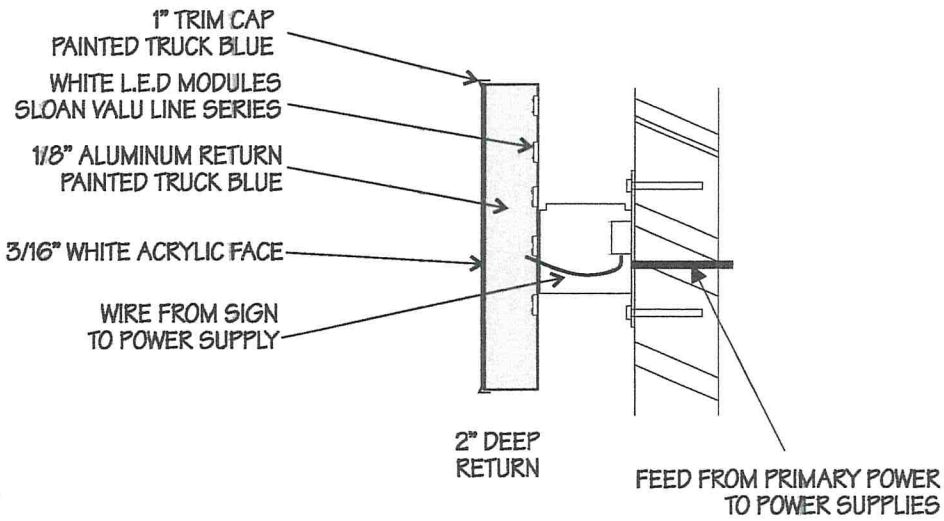

SECTION THROUGH LETTER
NO SCALE

UNIVERSAL Signs INC.
1033 THOMAS AVE
ST. PAUL, MN 55104
ph 651-645-0223
fax 651-645-2531
www.universalsignsinc.com

LOCATION
SLEEP NUMBER
1723 COUNTY RD B2
ROSEVILLE, MN

DRAWN BY	REVISED
SEP	
DATE	SCALE
2/22/12	NOTED

sleep number

UNIVERSAL Signs INC.
1033 THOMAS AVE
ST. PAUL, MN 55104
ph 651-645-0223
fax 651-645-2531
www.universalsignsinc.com

LOCATION
SLEEP NUMBER
1723 COUNTY RD B2
ROSEVILLE, MN

PAGE 2

DRAWN BY	REVISED
SEP	
DATE	SCALE
2/22/12	NONE

sleep number

OPAQUE DARK BLUE VINYL
INSTALLED FIRST AND SECOND SURFACE

SOUTH ELEVATION

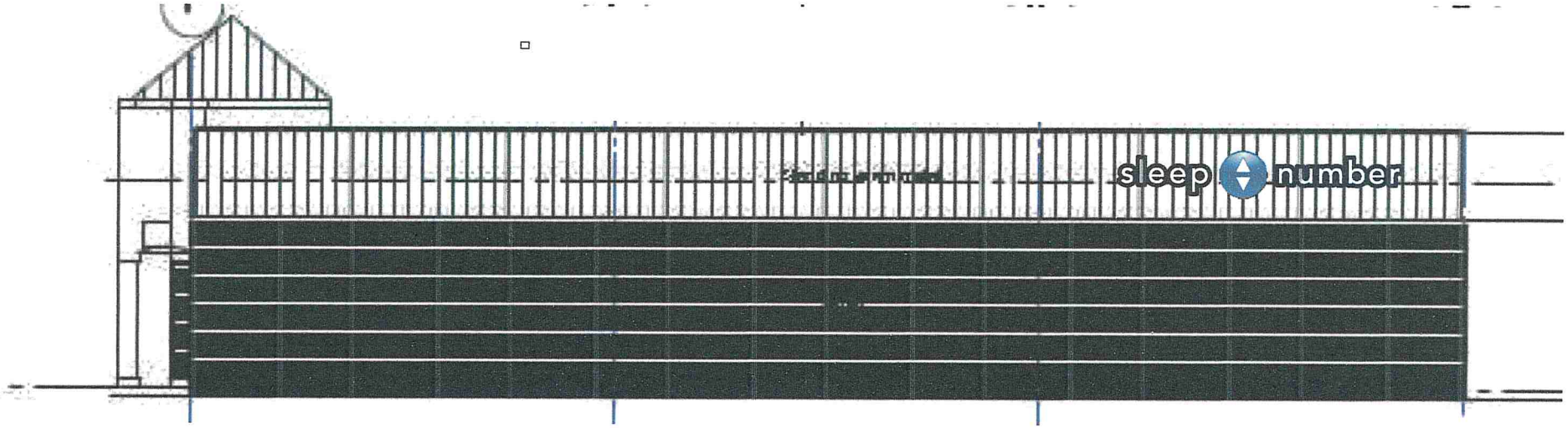

EAST ELEVATION

THIS IS WHAT THE LANDLORD IS PROPOSING IN THEIR MASTER SIGN PLAN 2.5 SQUARE FEET PER LINEAR FOOT.
IT IS NOT LIKELY TO PASS BUT IF IT DOES THIS WOULD BE THE MAXIMUM ALLOWED SIGNAGE PER THE LL

SEE PAGE 4
FOR SPECS

UNIVERSAL Signs INC.
1033 THOMAS AVE
ST. PAUL, MN 55104
ph 651-645-0223
fax 651-645-2531
www.universalsignsinc.com

LOCATION
SLEEP NUMBER
1723 COUNTY RD B2
ROSEVILLE, MN

PAGE 1

DRAWN BY	REVISED
SEP	
DATE	SCALE
2/22/12	3/32" = 1'-0"

sleep number

MATTRESS FIRM

Rosedale

Sign A	
Sign:	33" Mattress Firm
Sign Type:	Channel Letters on a Raceway w/ Backer Panel
Illumination:	Internally Illuminated LED
Square Footage:	87.09
To Grade:	Top of Sign To Grade = 24'- 11 1/2" Bottom of Sign To Grade = 21'-0 1/4"

Sign B	
Sign:	27" Mattress Firm
Sign Type:	Channel Letters on a Raceway w/ Backer Panel
Illumination:	Internally Illuminated LED
Square Footage:	58.33
To Grade:	Top of Sign To Grade = 16'-9 5/8" Bottom of Sign To Grade = 13'-7"

Sign C	
Sign:	Mattress Firm SuperCenter
Sign Type:	Lexan panels with applied vinyl to be supplied by others
Actual Size:	TBD
Viewable Size:	TBD
Square Footage:	TBD

NOTE: DRAWING IS FOR REPRESENTATIONAL PURPOSES ONLY. EXACT DIMENSIONS (FIELD SURVEY) REQUIRED PRIOR TO FABRICATION.

MATTRESS FIRM

Client:	Mattress Firm
Site #:	MF-A15694
Address:	1723 Country Road B 2 West
	Roseville, MN 55113
	Rosedale

REVISION INFO		
01/18/2012	Original Rendering	BC
03/29/2012	Redrew Elevation Renderings	BC

AnchorSign.
1.800.213.3331

Sign A	
Sign:	30" Mattress Firm linear
Sign Type:	Channel Letters on a Raceway w/ Backer Panel
Illumination:	Internally Illuminated LED
Square Footage:	92.00
To Grade:	Top of Sign To Grade = 17'-5 1/4" Bottom of Sign To Grade = 13'-11 1/4"

Existing

NOTE: DRAWING IS FOR REPRESENTATIONAL PURPOSES ONLY. EXACT DIMENSIONS (FIELD SURVEY) REQUIRED PRIOR TO FABRICATION.

Jefferson House A1810

Hale Village A1827

Allowable Square Footage this Elevation:	142.50
Formula: Allowed 1.5 square feet per linear foot of store front for entire building 1.5 x 95 = 142.50	
Actual Square Footage this Elevation:	92.00

MATTRESS FIRM

Client: Mattress Firm
Site #: MF-A15694
Address: 1723 Country Road B 2 West
Roseville, MN 55113
Rosedale

REVISION INFO			
01/18/2012	Original Rendering	BC	
03/29/2012	Redrew Elevation Renderings	BC	

AnchorSign.
1.800.213.3331

Sign B	
Sign:	27" Mattress Firm
Sign Type:	Channel Letters on a Raceway w/ Backer Panel
Illumination:	Internally Illuminated LED
Square Footage:	58.33
To Grade:	Top of Sign To Grade = 16'-9 5/8" Bottom of Sign To Grade = 13'-7"

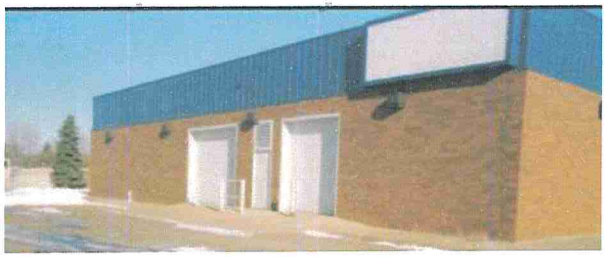

Existing

NOTE: DRAWING IS FOR REPRESENTATIONAL PURPOSES ONLY. EXACT DIMENSIONS (FIELD SURVEY) REQUIRED PRIOR TO FABRICATION.

Jefferson House A1810

Hale Village A1827

Allowable Square Footage this Elevation:	142.50
Formula: Allowed 1.5 square feet per linear foot of store front for entire building 1.5 x 95 = 142.50	
Actual Square Footage this Elevation:	58.33

MATTRESS FIRM

Client:	Mattress Firm
Site #:	MF-A15694
Address:	1723 Country Road B 2 West Roseville, MN 55113 Rosedale

REVISION INFO		
01/18/2012	Original Rendering	BC
03/29/2012	Redrew Elevation Renderings	BC

AnchorSign.
1.800.213.3331

Sign A	
Sign:	30" Mattress Firm linear
Sign Type:	Channel Letters on a Raceway w/ Backer Panel
Illumination:	Internally Illuminated LED
Square Footage:	92.00
To Grade:	Top of Sign To Grade = 17'-5 1/4" Bottom of Sign To Grade = 13'-11 1/4"

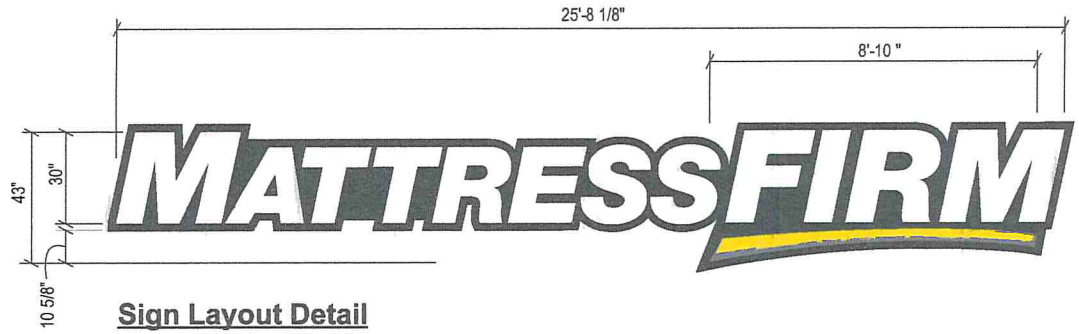

Sign Layout Detail

Scale: 1/4" = 1'-0"

Electrical Detail:

Agilight Tuffrayz White led's
( ) Xitanium transformers
Total Amps:
( ) 20 amp 120V Circuit Req.

General Notes:

This sign is to be installed in accordance with the requirements of Article 600 of the National Electrical Code.

1) Grounded and bonded per NEC 600.7/NEC 250
2) Existing branch circuit in compliance with NEC 600.5, not to exceed 20 amps
3) Sign is to be UL listed per NEC 600.3
UL disconnect switch per NEC 600.6- required per sign component before leaving manufacturer*
*For multiple signs, a disconnect is permitted but not required for each section

NOTE: DRAWING IS FOR REPRESENTATIONAL PURPOSES ONLY. EXACT DIMENSIONS (FIELD SURVEY) REQUIRED PRIOR TO FABRICATION.

Specifications: Channel Letters/ Backer panel/ Raceway

1. Existing Facade: TBD
2. 0.040" Aluminum letter returns painted to match black
3. 0.125" x 1" trim cap to match black
4. 3mm Signabond Lite composite backs
   (interior of sign can painted ultra white for maximum illumination)
5. White LED's
6. 3/16" acrylic faces;
   - R&H #7328 White acrylic for letters
   - R&H #2016 Yellow for "Swoosh" w/
     - 3m #7725-12 Gloss Black vinyl 'drop shadow' on swoosh
7. Waterproof disconnect switch per NEC 600-6
8. Primary electrical feed
9. Transformers
10. 0.080" Aluminum raceway painted to match the facade
11. 15" x 2" x 0.1875" Aluminum mounting tabs welded to raceway
    - Maximum 6" from each end and every 48" o.c.
12. #12 x 1" TEC screws with 11/4" fender washers
13. Mounting hardware to suit
14. 0.080" Backer panel painted to match black

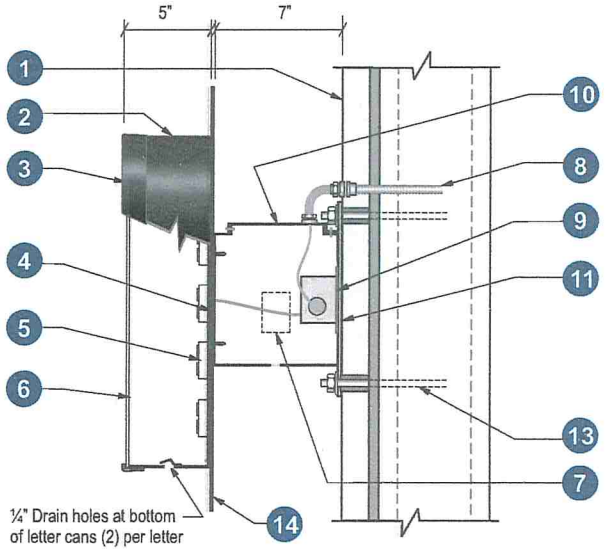

Section @ LED Channel Letter

Backer Panel / Raceway Scale: N.T.S.

Client:	Mattress Firm
Site #:	MF-A15694
Address:	1723 Country Road B 2 West
	Roseville, MN 55113
	Rosedale

REVISION INFO			
01/18/2012	Original Rendering	BC	
03/29/2012	Redrew Elevation Renderings	BC	

AnchorSign.
1.800.213.3331

Sign B	
Sign:	27" Mattress Firm
Sign Type:	Channel Letters on a Raceway w/ Backer Panel
Illumination:	Internally Illuminated LED
Square Footage:	58.33
To Grade:	Top of Sign To Grade = 16'-9 5/8" Bottom of Sign To Grade = 13'-7"

Sign Layout Detail

Scale: 1/4" = 1'-0"

Electrical Detail:

Agilight Tuffrayz White led's
( ) Xitanium transformers
Total Amps:
( ) 20 amp 120V Circuit Req.

General Notes:

This sign is to be installed in accordance with the requirements of Article 600 of the National Electrical Code.

1) Grounded and bonded per NEC 600.7/NEC 250
2) Existing branch circuit in compliance with NEC 600.5, not to exceed 20 amps
3) Sign is to be UL listed per NEC 600.3
4) UL disconnect switch per NEC 600.6- required per sign component before leaving manufacturer*
For multiple signs, a disconnect is permitted but not required for each section

NOTE: DRAWING IS FOR REPRESENTATIONAL PURPOSES ONLY. EXACT DIMENSIONS (FIELD SURVEY) REQUIRED PRIOR TO FABRICATION.

Specifications: Channel Letters/ Backer panel/ Raceway

1. Existing Facade: TBD
2. 0.040" Aluminum letter returns painted to match black
3. 0.125" x 1" trim cap to match black
4. 3mm Signabond Lite composite backs
   (interior of sign can painted ultra white for maximum illumination)
5. White LED's
6. 3/16" acrylic faces;
   - R&H #7328 White acrylic for letters
   - R&H #2016 Yellow for "Swoosh" w/
     - 3m #7725-12 Gloss Black vinyl 'drop shadow' on swoosh
7. Waterproof disconnect switch per NEC 600-6
8. Primary electrical feed
9. Transformers
10. 0.080" Aluminum raceway painted to match the facade
11. 15" x 2" x 0.1875" Aluminum mounting tabs welded to raceway
    - Maximum 6" from each end and every 48" o.c.
12. #12 x 1" TEC screws with 11/4" fender washers
13. Mounting hardware to suit
14. 0.080" Backer panel painted to match black

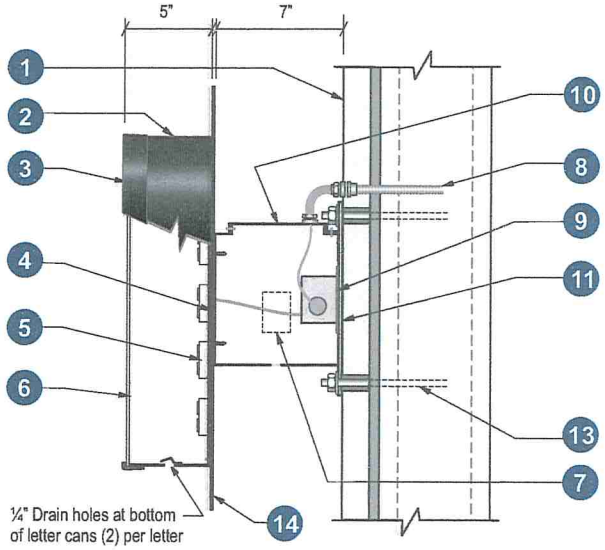

Section @ LED Channel Letter

Backer Panel / Raceway Scale: N.T.S.

MATTRESS FIRM

Client:	Mattress Firm
Site #:	MF-A15694
Address:	1723 Country Road B 2 West
	Roseville, MN 55113
	Rosedale

REVISION INFO			
01/18/2012	Original Rendering	BC	
03/29/2012	Redrew Elevation Renderings	BC	

AnchorSign.
1.800.213.3331

Sign C	
Sign:	Mattress Firm SuperCenter
Sign Type:	Lexan panels with applied vinyl to be supplied by others
Actual Size:	TBD
Viewable Size:	TBD
Square Footage:	TBD

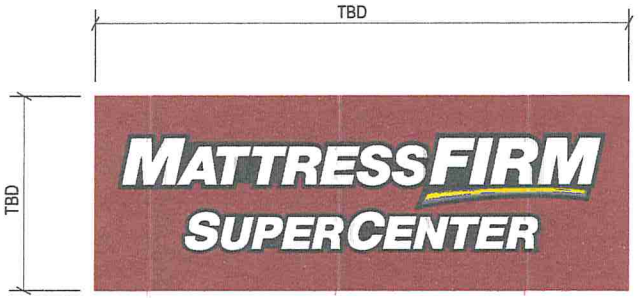

Applied Vinyl to Existing Panel
Qty. 2 (1 Set) N.T.S.

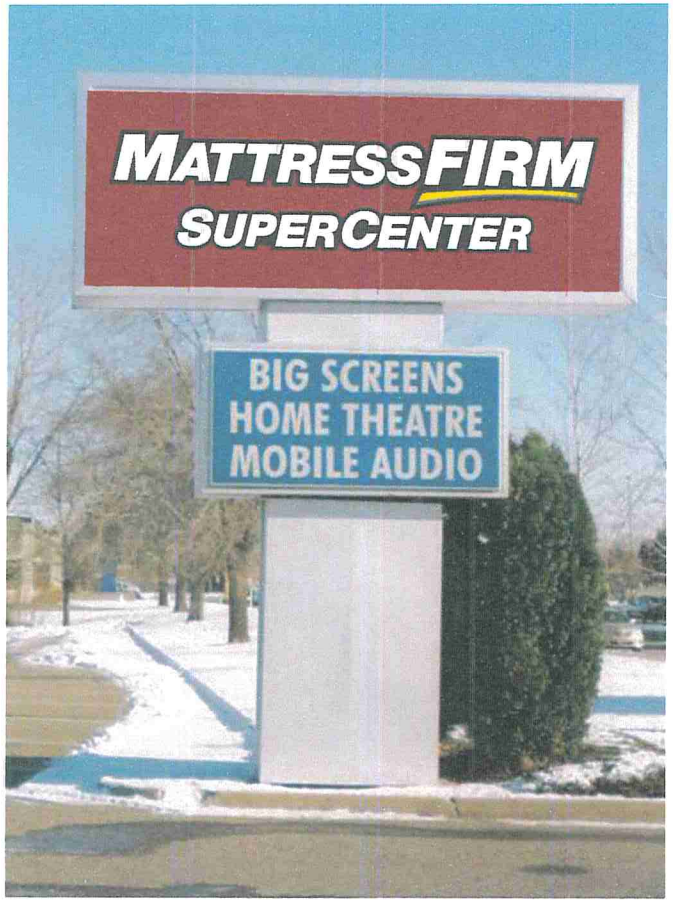

Pylon Elevation
N.T.S.

NOTE: DRAWING IS FOR REPRESENTATIONAL PURPOSES ONLY. EXACT DIMENSIONS (FIELD SURVEY) REQUIRED PRIOR TO FABRICATION.

MATTRESS FIRM

Client:	Mattress Firm
Site #:	MF-A15694
Address:	1723 Country Road B 2 West
	Roseville, MN 55113
	Rosedale

REVISION INFO		
01/18/2012	Original Rendering	BC
03/29/2012	Redrew Elevation Renderings	BC

AnchorSign.
1.800.213.3331

Perry Bolin Architecture, PLLC
Perry Bolin, AIA, NCARB, LEED AP

Memorandum

Date: 02/16/2012 Revised 04/04/12
By: Perry Bolin (PBA)
To: Mark Abramovitz
Project: 1723 County Road B, Roseville

Subject: Master Sign Plan Calculation - Mattress Firm, Select Comfort, & TBD

Master Sign Plan required by the City of Roseville Thomas Pashke 651-792-7005

The MAXIMUM allowable area of wall signs is 1.5 sf x 1.5 = up to 2.25 sf per front foot of the building for each tenant. Total allowable for all sides of the building. Total Wall Sign area 2.25 x 196 LF = 441 sf maximum allowable.

Wall Signs

Mattress Firm 99 lf x 2.25 = 222 SF of total wall sign area allowable
Proposed A 92 SF +B 58.33 = 150.33 SF

Sleep Express 56 lf x 2.25 = 125 sf of total wall sign area allowable
Proposed S 61.75 + E 42 = 103.75

To be determined 41 lf x 2.25 = 92 sf of total wall sign area allowable
Proposed S 54 + N 32 =86 SF

Total Wall Sign area = 441 sf MAXIMUM
Proposed 150.33 + 103.75 + 86 = 340 SF = 77% of allowable

Freestanding Signs

Up to 150 SF for 3 tenants, maximum height 25 ft
Existing sign is 5 x 15' = 75 SF + 32 sf = 107 SF +/- , 20height +/-

Proposed Mattress Firm Sign C Freestanding Existing upper sign 5 x 15' = 75 SF
Proposed Select Comfort Freestanding lower sign = ½ x 32 sf = 16 SF
Proposed TBD Freestanding lower sign = ½ x 32 sf = 16 SF
Proposed Total 107 +/- SF (Existing Sign Area) = 71.33% of allowable

(651) 208- 1798 5009 Quail Ave. N. Minneapolis, MN 55429 perryb@usfamily.net

Mattress Firm Sign Proposal

Sign A South 25'8" ft long = 92 sf
Sign B West 23' 1 ½" ft long = 58.33 sf

Sign C Freestanding Existing upper sign 5 x 15' = 75 SF

Select Comfort Sign Proposal

56 lf x 2.25 = 125 sf of total wall sign area
Proposed South 61.75 SF
Proposed East 42 SF

Freestanding lower sign = ½ x 32 sf = 16 SF

Future Tenant Signs
41 lf x 2.25 = 92 sf of total wall sign area
Proposed South 54 SF
Proposed North 32 SF

Freestanding Sign - ½ x 32 sf = 16 SF

(651) 208- 1798 5009 Quail Ave. N. Minneapolis, MN 55429 perryb@usfamily.net

SURVEY FOR: FLAME DEVELOPMENT COMPANY

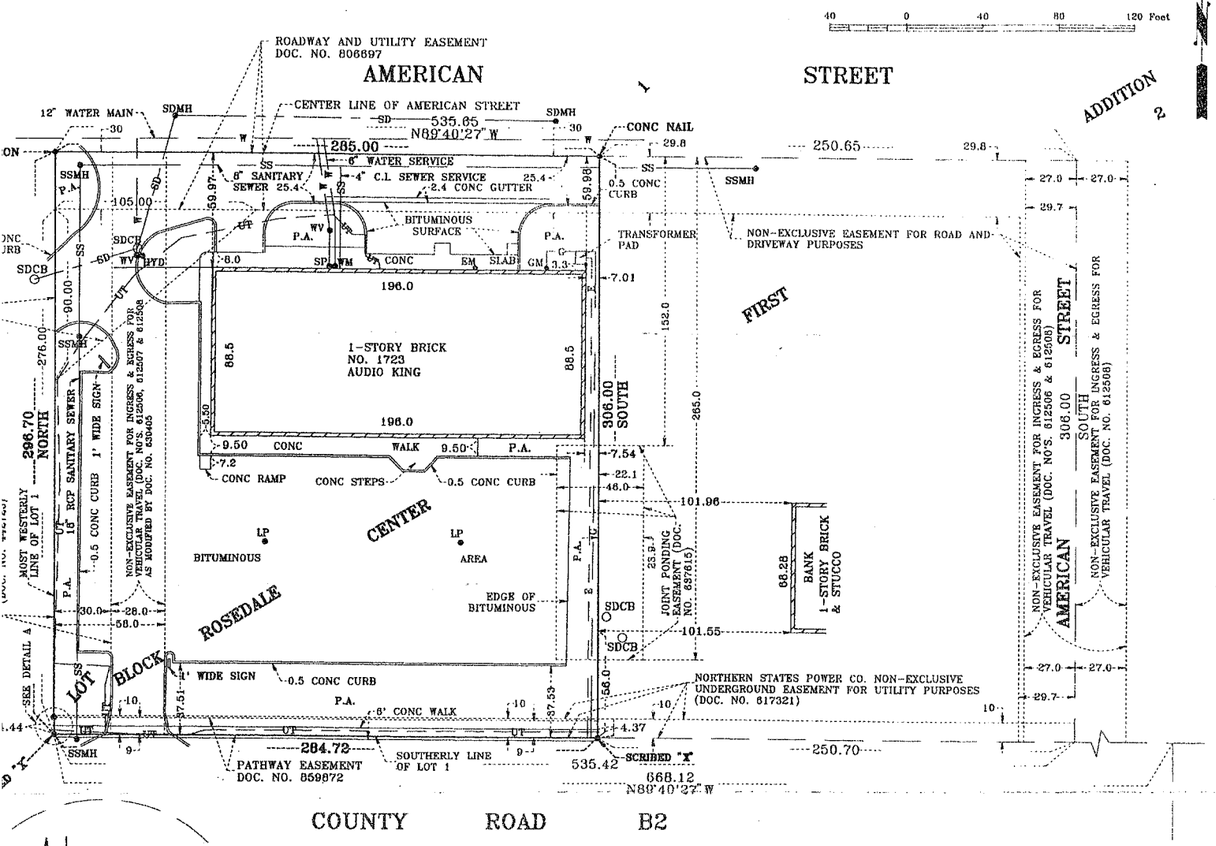

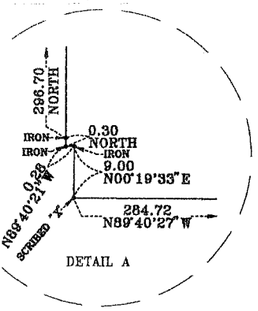

BEARINGS SHOWN ARE BASED ON THE BEARINGS SHOWN ON THE PLAT OF ROSEDALE CENTER FIRST ADDITION.
UTILITY INFORMATION SHOWN IS BASED ON AVAILABLE INFORMATION.
MINNESOTA STATE STATUTE 216-D REQUIRES NOTIFICATION OF AN UNDERGROUND LOCATOR SYSTEM CALLED "GOPHER ONE-CALL" (612-454-2037) FOR UNDERGROUND UTILITY LOCATIONS PRIOR TO ANY EXCAVATION.
EASEMENTS SHOWN ARE AS PER CERTIFICATE OF TITLE 39522 DATED JULY 1, 1996

DENOTES PROPERTY CORNER.
DENOTES WATER VALVE.
DENOTES WATER METER.
DENOTES FIRE HYDRANT.
DENOTES GAS METER.
DENOTES ELECTRIC METER.
DENOTES LIGHT POLE.
DENOTES STAND PIPE.
DENOTES UNDERGROUND TELEPHONE LINE.
DENOTES STORM CATCH BASIN.
DENOTES STORM MANHOLE.
DENOTES STORM SEWER.
DENOTES SANITARY SEWER MANHOLE.
DENOTES SANITARY SEWER.
DENOTES ELECTRIC LINE.

I hereby certify that this survey, plan, or

Legal Description:

All that part of Lot 1, Block 2, ROSEDALE CENTER FIRST ADDITION, lying Westerly of a line drawn parallel with and 285.00 feet Easterly of, as measured at right angles to, the most Westerly line of said Lot 1 and lying Southerly of a line drawn parallel with and 306.00 feet Northerly of, as measured at right angles to, that portion of the Southerly line of said Lot 1 which has a bearing of S 89 degrees 40 minutes 27 seconds E and a distance of 668.12 feet on the recorded plat of said ROSEDALE CENTER FIRST ADDITION.

Subject to and together with easements for joints ponding as shown as shown in Document No. 637615.

Subject to a Easement for Roadway and Utilities as described in Document No. 806697.

Together with a non-exclusive easement for road and driveway purposes over the East 29.7 feet and the North 29.8 feet of that part of said Lot 1 as described in Documents No's 612506 & 612508.

Subject to and together with easements and restrictions of record.

I hereby certify that this survey is made in accordance with the "Minimum Standard Detail Requirements" for ALTA/ACSM Land Title Survey jointly established and adopted by the ALTA/ACSM in 1992 and meets the accuracy requirements for an urban survey as defined therein.

NOTE: THIS SURVEY CERTIFICATE IS NOT VALID WITHOUT AN ORIGINAL SIGNATURE AND A RAISED SEAL.

DATE: 8/6/96	C. E. COULTER & ASSOCIATES, INC.	SCALE: 1" = 40'
REVISIONS		JOB NO. 11,583

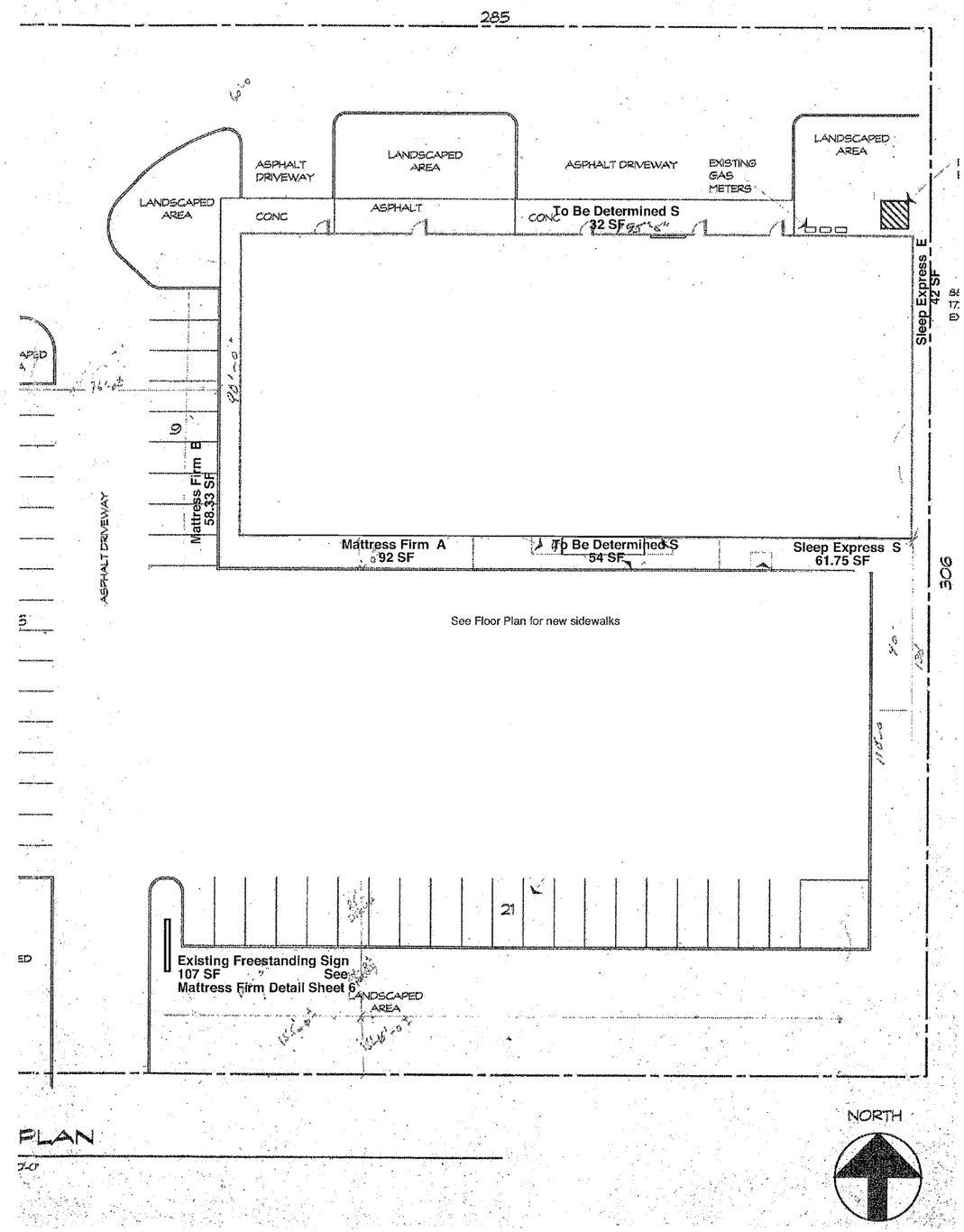

PLAN

Perry Bolin Architecture PLLC
5009 Quail N. Mpls, MN 55429
P: 651.208.1798
F: 612.729.8351
© 2012 E: perryb@ustamily.net

I hereby certify that this plan, specification or report was prepared by me or under my direct supervision and that I am a duly Licensed Architect under the laws of the State of Minnesota.

Perry R. Bolin 134 Date: 03/16/12

Owner:
FLAME DEVELOPMENT COMPANY
1660 South Hwy 100
St. Louis Park, MN 55416
952-893-0729

03/16/12 Permit Set

Exterior Renovaton & Tenant Demising Walls for Mattress Firm & Select Comfort
1723 County Road B2
St. Paul, MN 55113

SHEET 1

South Elevation

See Mattress Firm Sign Detail
92 SF

To Be Determined Sign Detail
54 SF

See Sleep Epress Sign Detail
61.75 SF

See Mattress Firm Sign Detail
58.33 SF

West Elevation

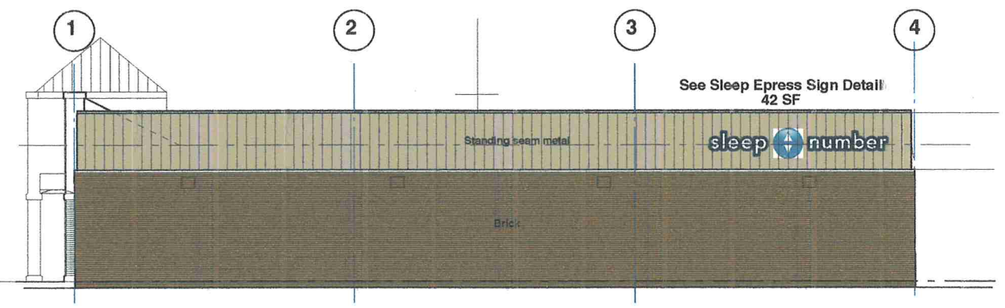

See Sleep Epress Sign Detail
42 SF

East Elevation

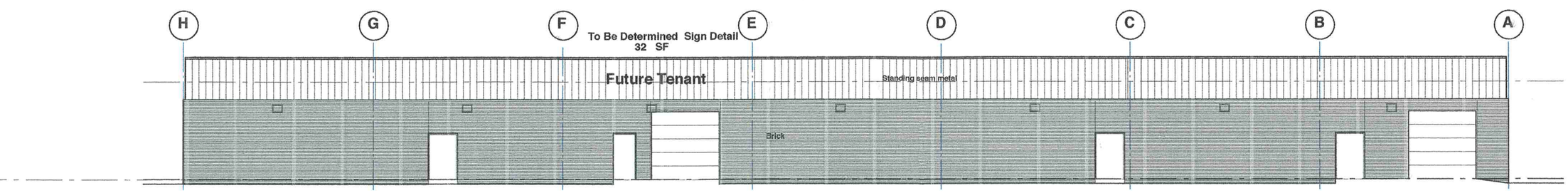

To Be Determined Sign Detail
32 SF

North Elevation

Perry Bolin Architecture PLLC
5009 Quail N. Mpls, MN 55429
P: 651.208.1798
F: 612.729.8351
E: perryb@usfamily.net

I hereby certify that this plan, specification or report was prepared by me or under my direct supervision and that I am a duly Licensed Architect under the laws of the State of Minnesota.

Perry R. Bolin 134 Date: 03/16/12

Owner:
FLAME DEVELOPMENT COMPANY
1680 South Hwy 100
St. Louis Park, MN 55416
952-893-0729

Issued: 03/16/12 Permit Set

Exterior Renovaton & Tenant Demising Walls for Mattress Firm & Select Comfort
1723 County Road B2
St. Paul, MN 55113